US009010012B2

(12) **United States Patent**
Matthews et al.

(10) **Patent No.: US 9,010,012 B2**
(45) **Date of Patent: Apr. 21, 2015**

(54) **GUN SIGHT**

(71) Applicant: **SureFire, LLC**, Fountain Valley, CA (US)

(72) Inventors: **John W. Matthews**, Newport Beach, CA (US); **Murray Dunn**, Encinitas, CA (US); **Michael LaSavio**, La Verne, CA (US); **Michael D. Picciotta**, Yorba Linda, CA (US); **Loc Nguyen**, Santa Ana, CA (US); **Ammar Burayez**, Silverado, CA (US); **Mark Buczek**, Oceanside, CA (US); **Mark Squire**, San Diego, CA (US)

(73) Assignee: **SureFire, LLC**, Fountain Valley, CA (US)

(*) Notice: Subject to any disclaimer, the term of this patent is extended or adjusted under 35 U.S.C. 154(b) by 129 days.

(21) Appl. No.: **13/797,095**
(22) Filed: **Mar. 12, 2013**

(65) **Prior Publication Data**

US 2013/0283660 A1 Oct. 31, 2013

Related U.S. Application Data

(63) Continuation-in-part of application No. 13/359,925, filed on Jan. 27, 2012, now Pat. No. 8,448,373, which is a continuation of application No. 12/785,781, filed on May 24, 2010, now Pat. No. 8,117,780.

(60) Provisional application No. 61/751,597, filed on Jan. 11, 2013.

(51) **Int. Cl.**
F41G 1/38 (2006.01)
F41G 1/30 (2006.01)
(Continued)

(52) **U.S. Cl.**
CPC ***F41G 1/30*** (2013.01); ***F41G 1/345*** (2013.01); ***F41G 11/004*** (2013.01); ***F41A 33/00*** (2013.01); ***F41G 1/16*** (2013.01); ***F41G 1/26*** (2013.01)

(58) **Field of Classification Search**
USPC 42/113, 130, 131, 140; 356/138, 143
See application file for complete search history.

(56) **References Cited**

U.S. PATENT DOCUMENTS

3,230,627 A 1/1966 Rickert et al.
3,645,635 A 2/1972 Steck
(Continued)

FOREIGN PATENT DOCUMENTS

DE 202007010552 11/2007
DE 102009056208 7/2010
(Continued)

OTHER PUBLICATIONS

msnbc.com, "New device could improve marksmanship", http://www.msnbc.msn.com/id/34384750/ns/technology_and_science-innovation/, Dec. 11, 2009, pp. 1-2.

(Continued)

Primary Examiner — J. Woodrow Eldred

(74) *Attorney, Agent, or Firm* — Haynes and Boone, LLP

(57) **ABSTRACT**

Various gun sights and related methods are provided. In one embodiment, a gun sight includes a light source adapted to project light, a user-viewable interface, and an optical element. The optical element includes a first surface adapted to pass the light to provide a reticle at the user-viewable interface. The optical element also includes a second surface adapted to refract the light to provide a light guide at a peripheral area of the user-viewable interface to aid a user to substantially align the user's eye with the reticle. Various mechanisms for aligning gun sights, attaching gun sights, related methods, and other embodiments are also provided.

41 Claims, 71 Drawing Sheets

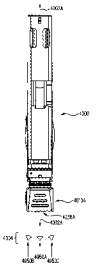

(51) **Int. Cl.**

F41G 1/34	(2006.01)
F41G 11/00	(2006.01)
F41A 33/00	(2006.01)
F41G 1/16	(2006.01)
F41G 1/26	(2006.01)

(56) **References Cited**

U.S. PATENT DOCUMENTS

3,994,597	A		11/1976	Calder et al.
4,057,318	A		11/1977	Schindl
4,367,949	A	*	1/1983	Lavering 356/144
4,483,598	A		11/1984	Leightner et al.
4,531,052	A		7/1985	Weaver et al.
4,730,104	A	*	3/1988	Rogers 235/412
4,806,007	A		2/1989	Bindon
5,140,151	A		8/1992	Weiner et al.
5,924,234	A		7/1999	Bindon et al.
6,487,809	B1		12/2002	Gaber
6,490,060	B1		12/2002	Tai et al.
7,069,685	B2		7/2006	Houde-Walter
7,319,557	B2		1/2008	Tai
7,325,354	B2		2/2008	Grauslys et al.
7,421,816	B2		9/2008	Conescu
7,656,579	B1		2/2010	Millett
7,721,481	B2		5/2010	Houde-Walter
7,764,431	B2		7/2010	Domjan et al.
7,796,329	B2		9/2010	Dobschal et al.
7,866,247	B2		1/2011	Son et al.
8,117,780	B2		2/2012	Matthews et al.
8,448,373	B2		5/2013	Matthews et al.
8,474,173	B2		7/2013	Matthews et al.
2005/0057808	A1		3/2005	Houde-Walter
2005/0219690	A1		10/2005	Lin et al.
2006/0010761	A1		1/2006	Staley, III
2006/0230665	A1		10/2006	Narcy et al.
2007/0214701	A1		9/2007	Grauslys et al.
2008/0163536	A1		7/2008	Koch et al.
2008/0163749	A1		7/2008	Reimer
2009/0015935	A1	*	1/2009	Szapiel et al. 359/674
2010/0095578	A1		4/2010	Elpedes et al.
2012/0030985	A1		2/2012	Mauricio et al.
2012/0033195	A1		2/2012	Tai
2012/0106170	A1		5/2012	Matthews et al.
2013/0312310	A1	*	11/2013	Geller 42/122

FOREIGN PATENT DOCUMENTS

EP	0 548 625	6/1993
GB	869627	5/1961
GB	1405122	9/1975
GB	1 579 796	11/1980
GB	2428929	2/2007
WO	WO 2009/137860	11/2009

OTHER PUBLICATIONS

Texas Instruments DLP in the Optoma Pico-Projector, "Technology Insider", http://chipworks.com.blogs.aspx?id=5618&blogid=86, Jan. 12, 2009, pp. 1-2.

"Reticle", http://en.wikipedia.org/wiki/Reticle, Jul. 22, 2009, pp. 1-4.

"Reflex sight", http://en.wikipedia.org/wiki/Reflex_sight, Jul. 24, 2009, pp. 1-4.

"Advanced Combat Optical Gunsight", http://en.wikipedia.org/wiki/Advanced_Combat_Optical_Gunsight, May 15, 2010, pp. 1-3.

American Rifleman, "Burris Eliminator Laserscope", Aug. 2011, pp. 86-87.

"Schmidt-Pechan prism", http://en.wikipedia.org/wiki/Schmidt%E2%80°/093Pechan_prism, Aug. 21, 2011, pp. 1-3.

"Telescopic sight", http://en.wikipedia.org/wiki/Telescopic_sight, Oct. 18, 2011, pp. 1-15.

Burris Company: "AR-332 Prism Sight", Sep. 21, 2010, http://webarchive.org/web/20100921180853/http://www.burristactical.com/ar332.html, retrieved Jan. 20, 2012, 1 page.

Brownells: "AR-332 Prism Sight", Jan. 1, 2012, http://www.brownells.com/.aspx/pid=31976/Product/AR-332-PRISM-SIGHT, retrieved Jan. 20, 2012, 1 page.

* cited by examiner

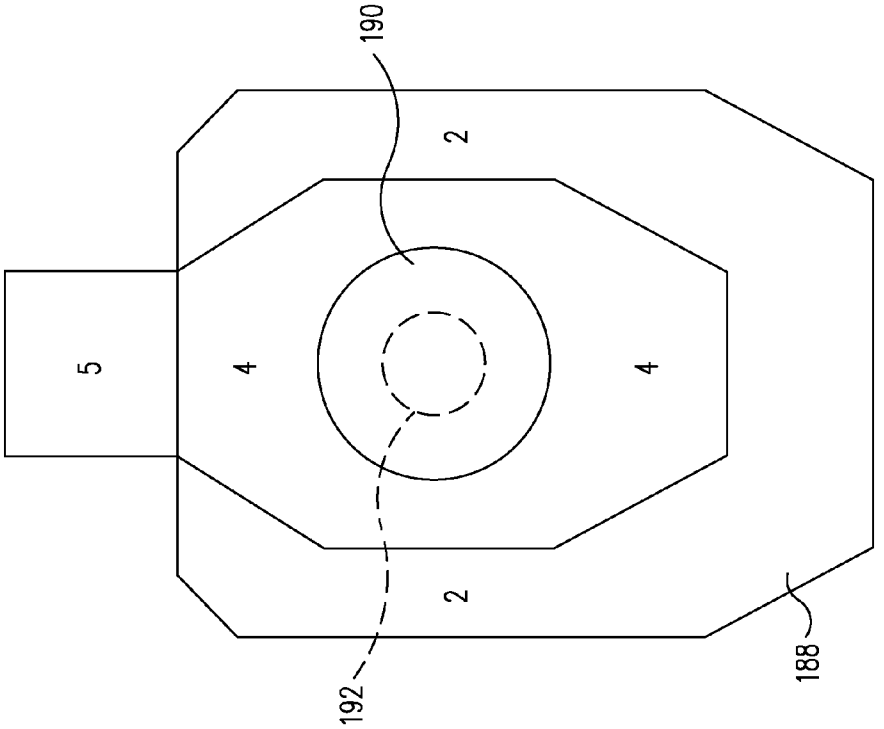

FIG. 2

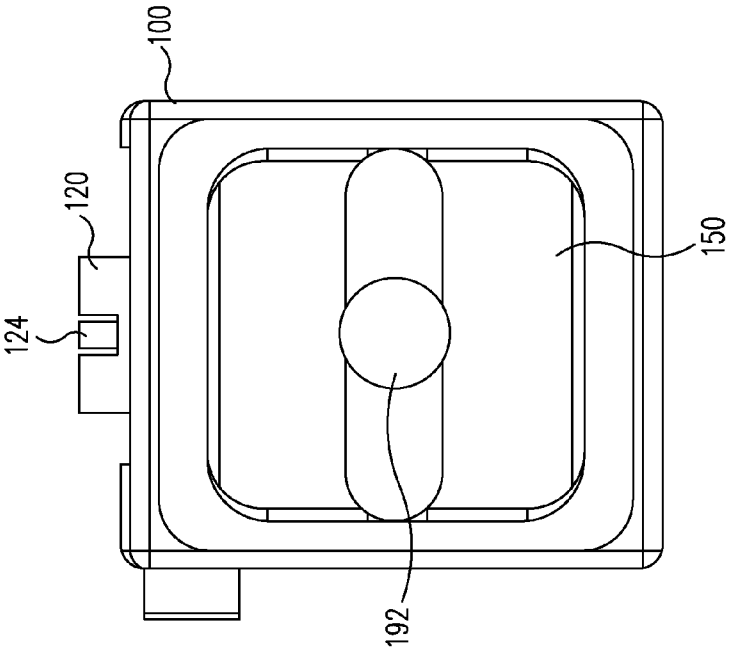

FIG. 1

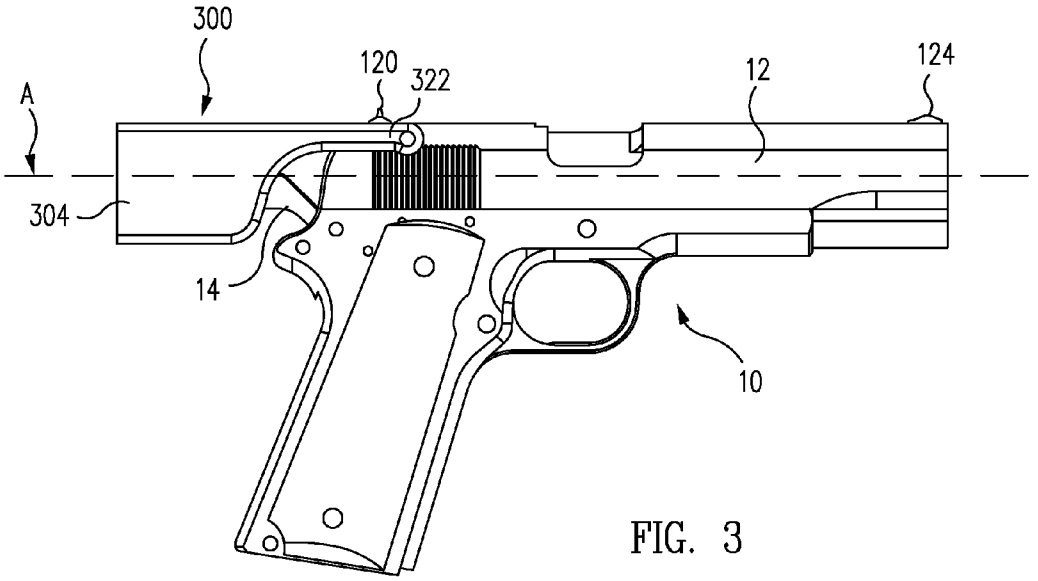

FIG. 3

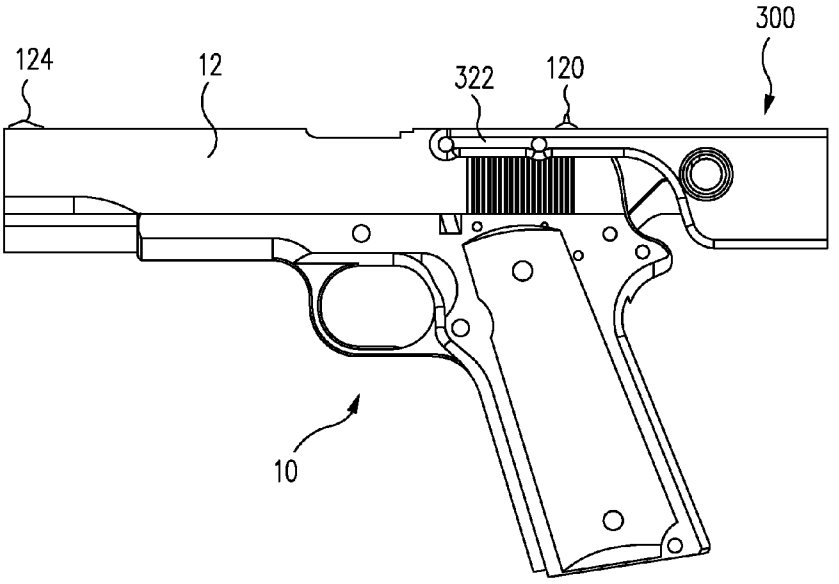

FIG. 4

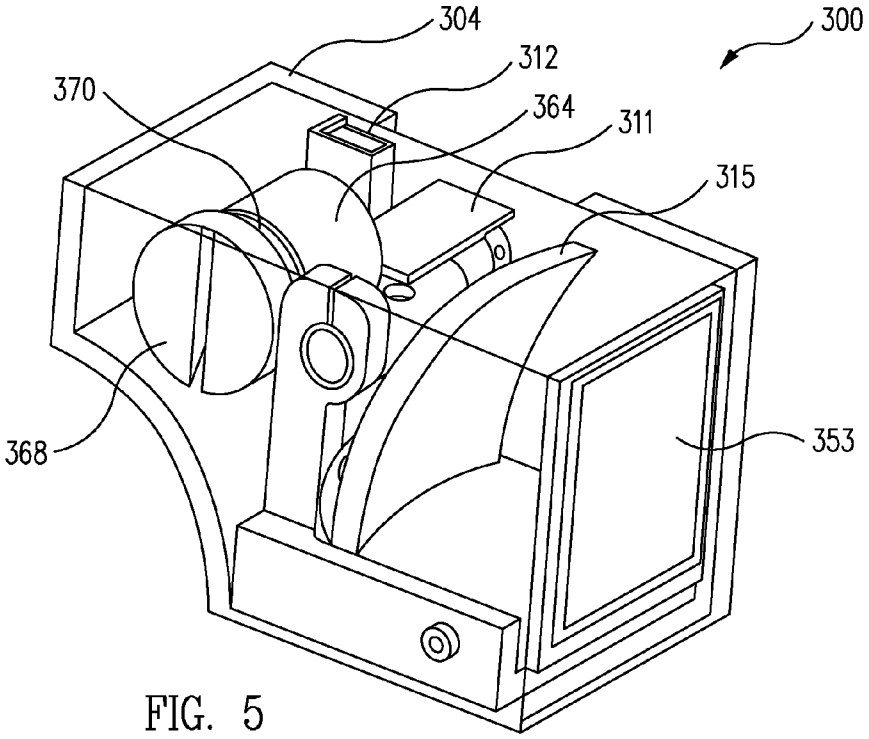
304
300
312
370
364
311
315
368
353

FIG. 5

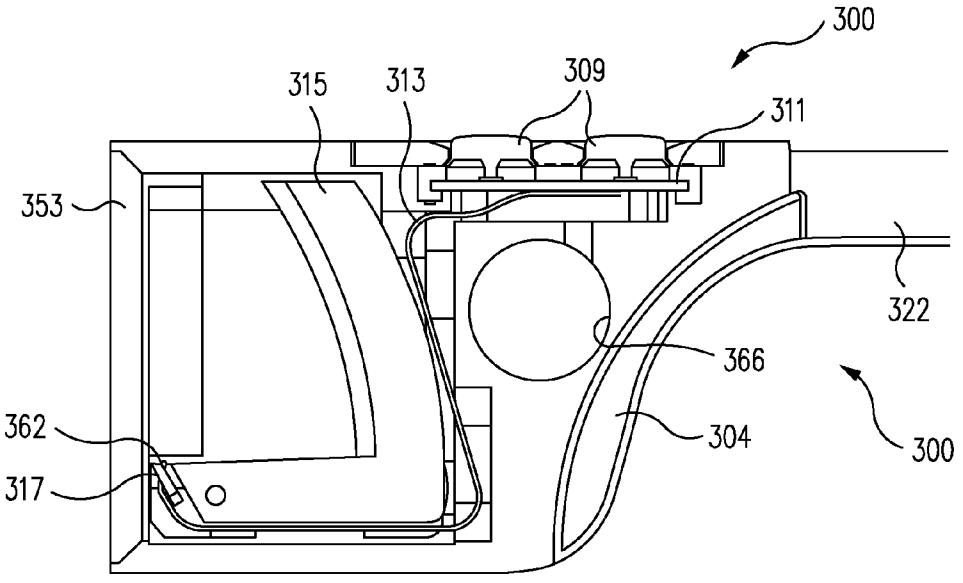
300
315
313
309
311
353
322
366
362
304
317
300

FIG. 6

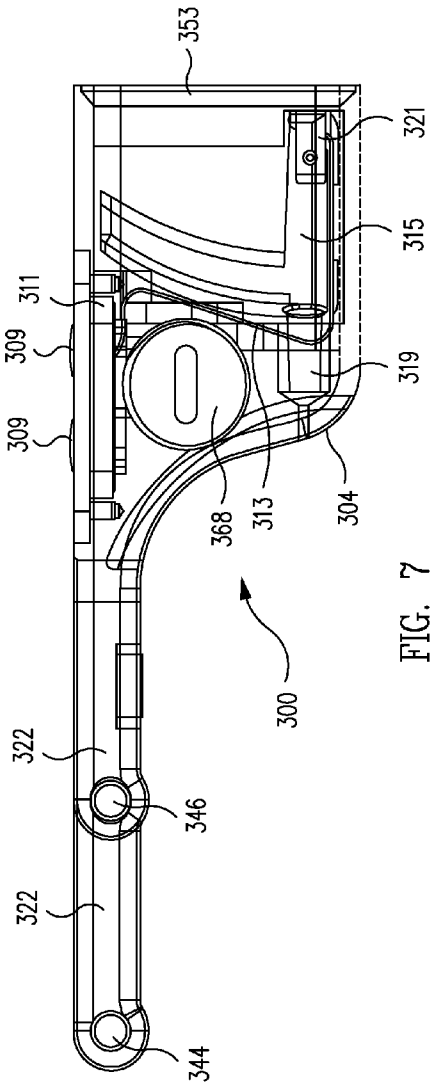
353
321
315
311
309
319
309
368
313
304
300
322
346
322
344

FIG. 7

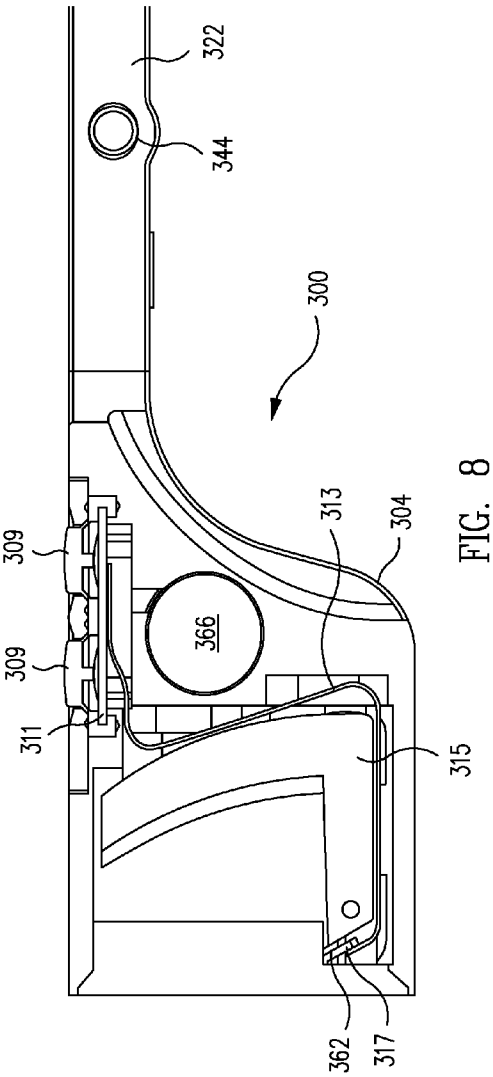
322
344
300
313
304
309
366
309
311
315
362
317

FIG. 8

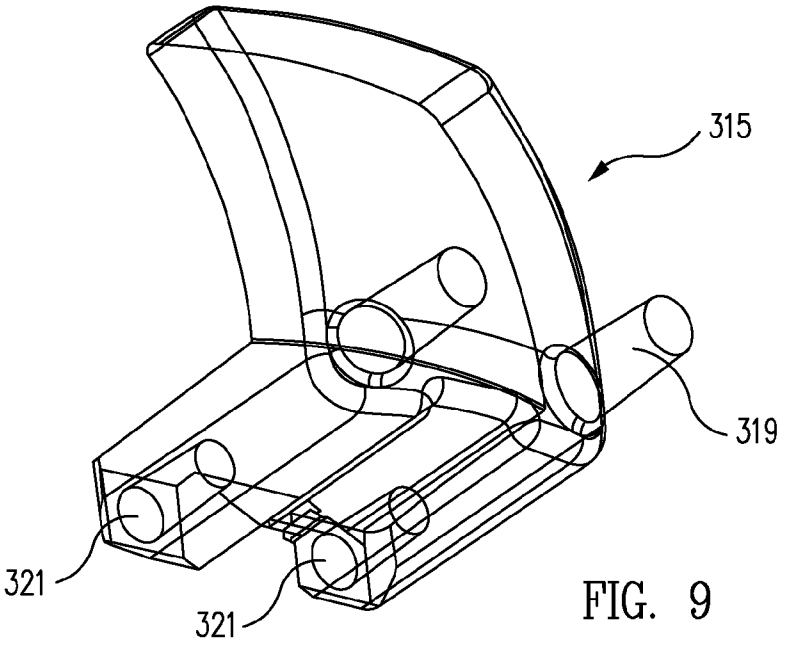

FIG. 9

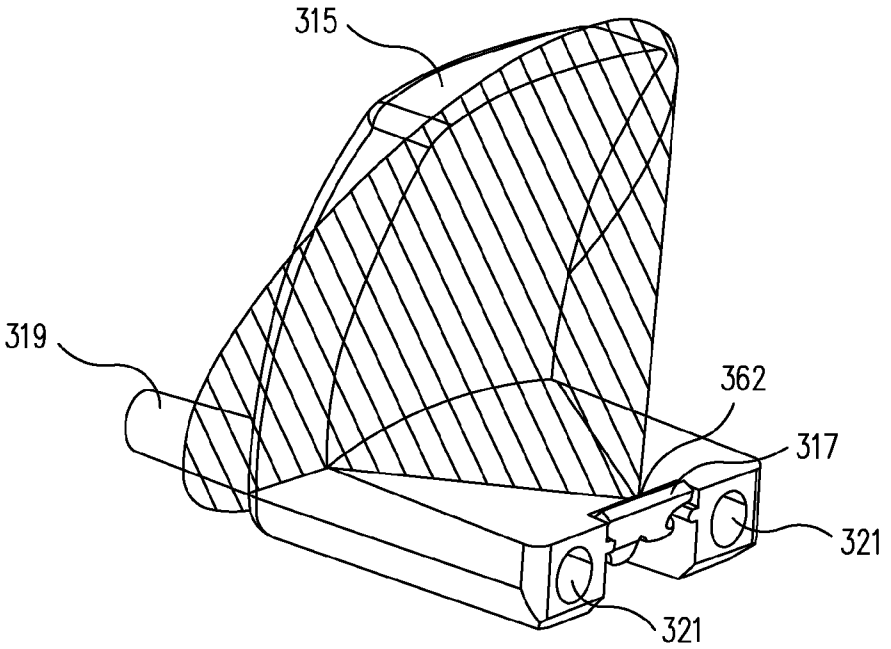

FIG. 10

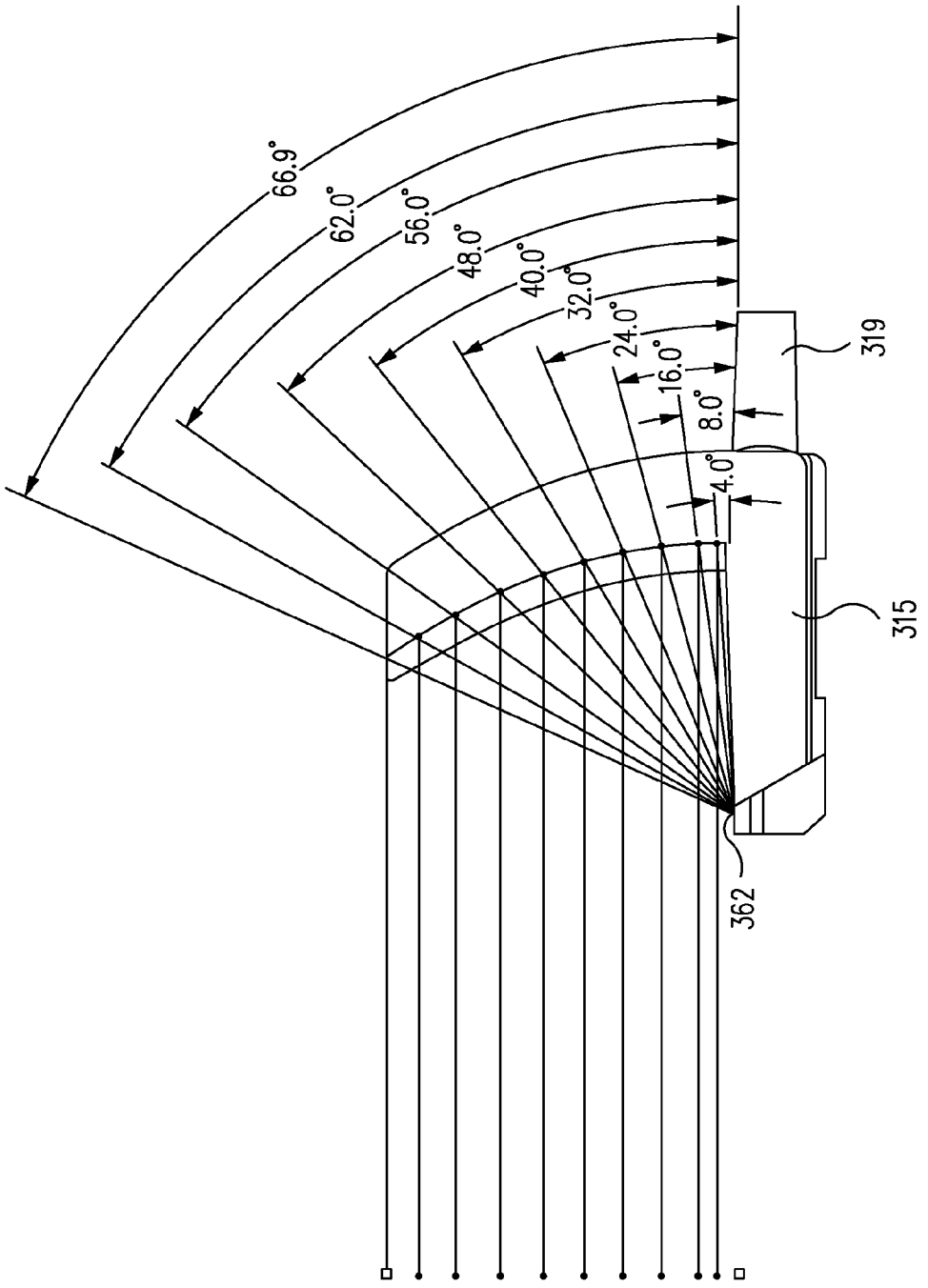

FIG. 11

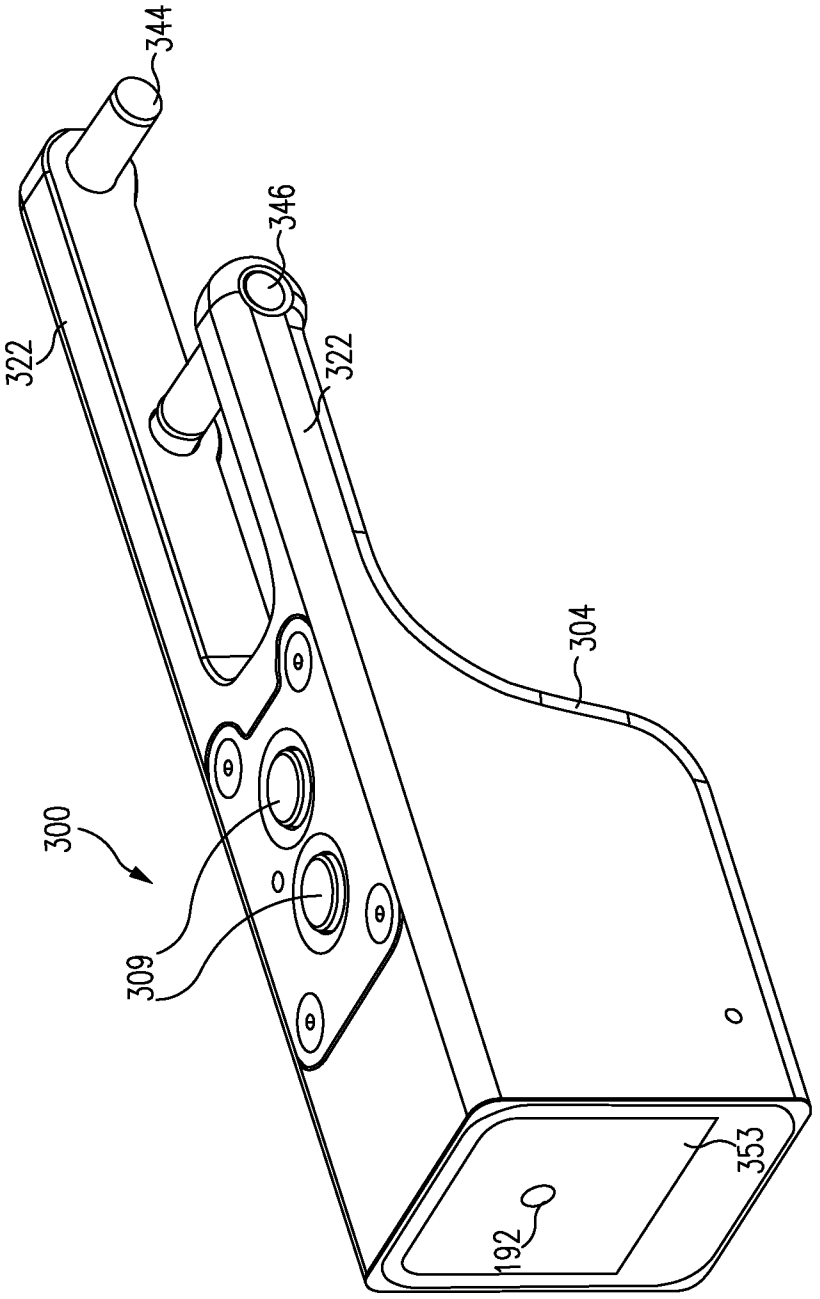

FIG. 12

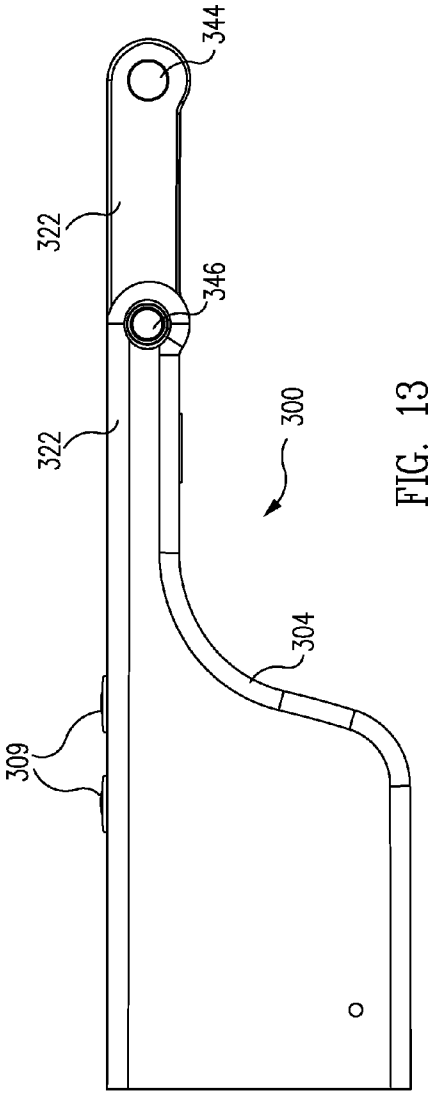

FIG. 13

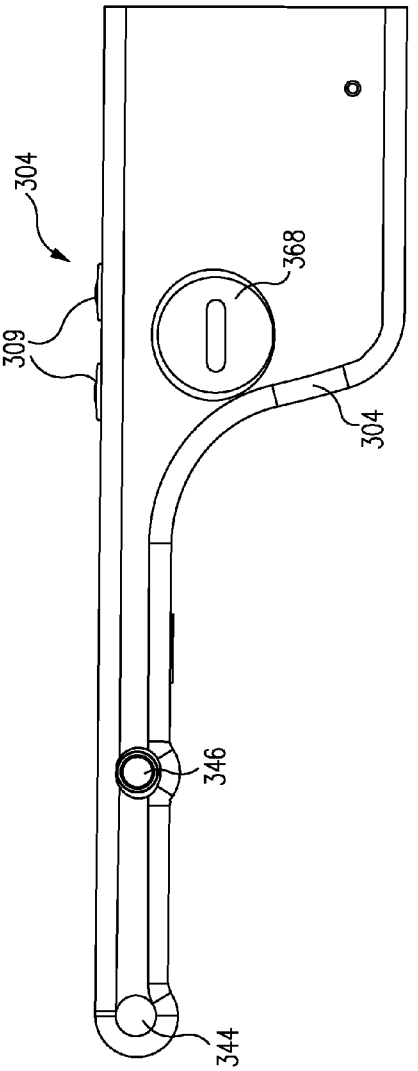

FIG. 14

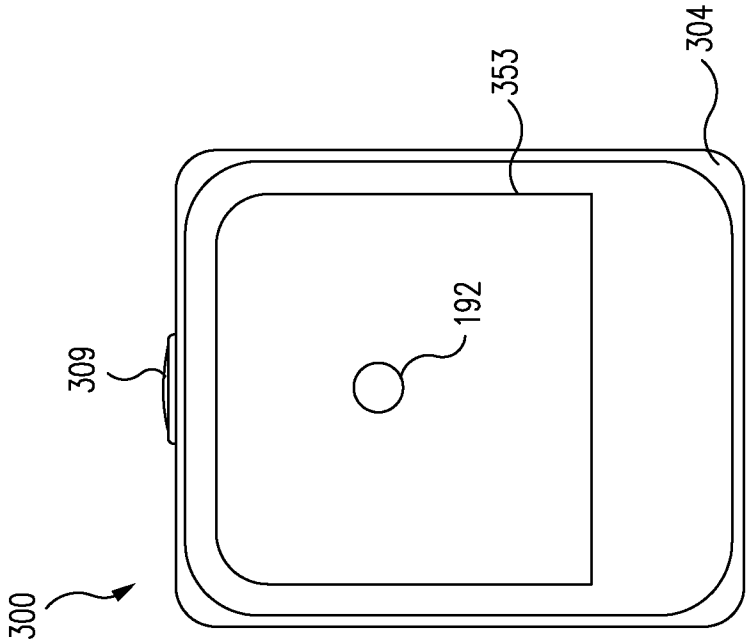

FIG. 16

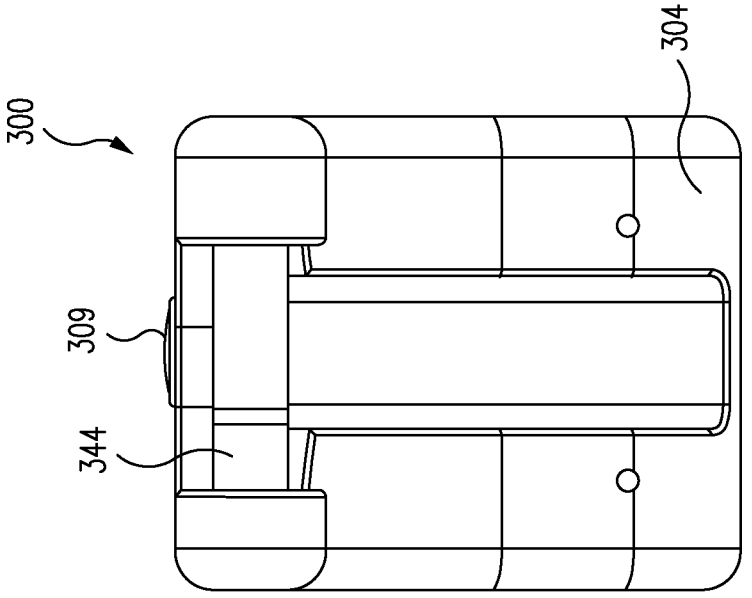

FIG. 15

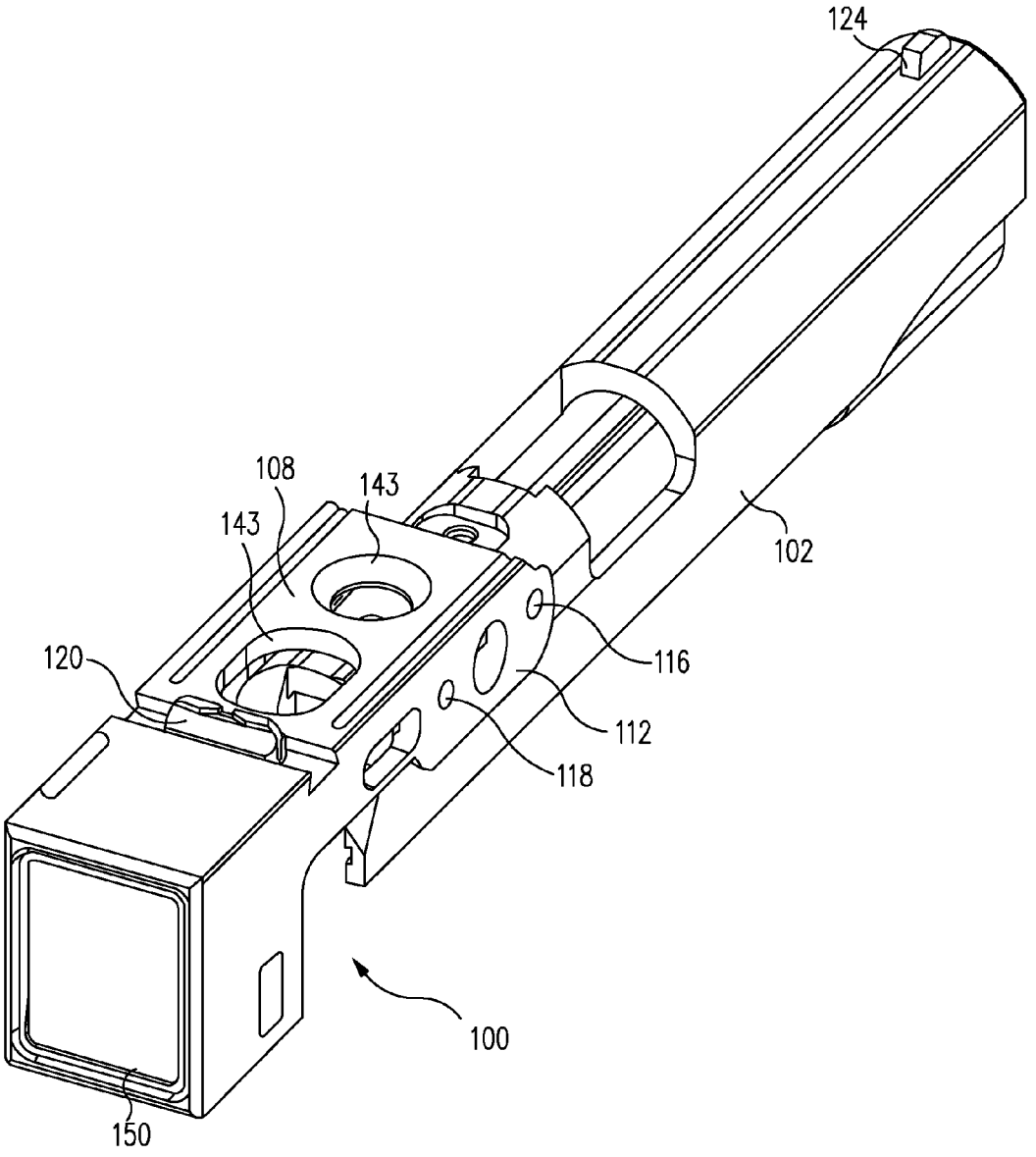

FIG. 17

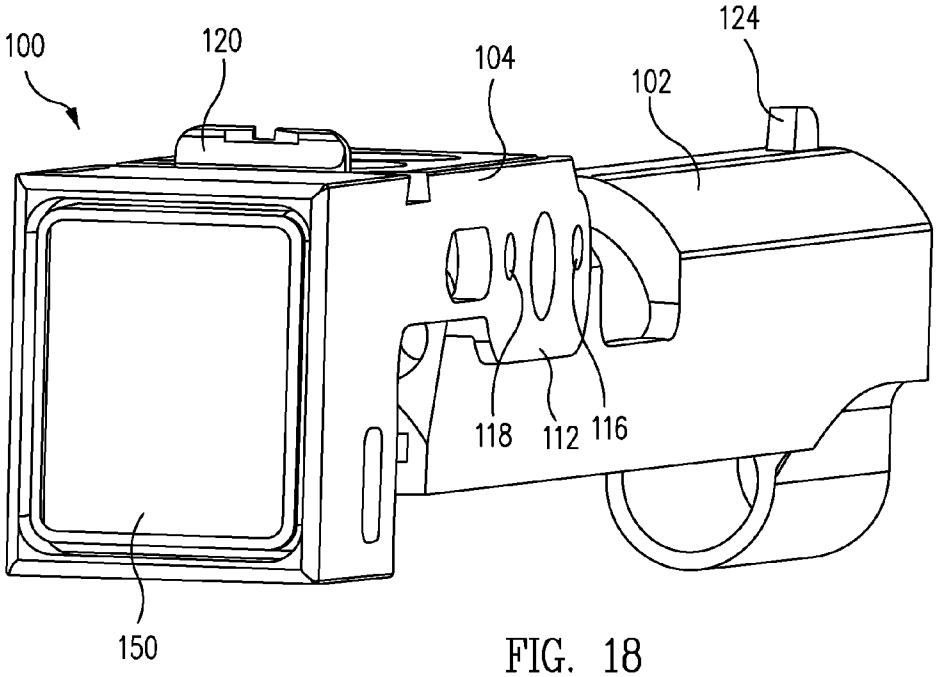
100
120
104
102
124
118
112
116
150

FIG. 18

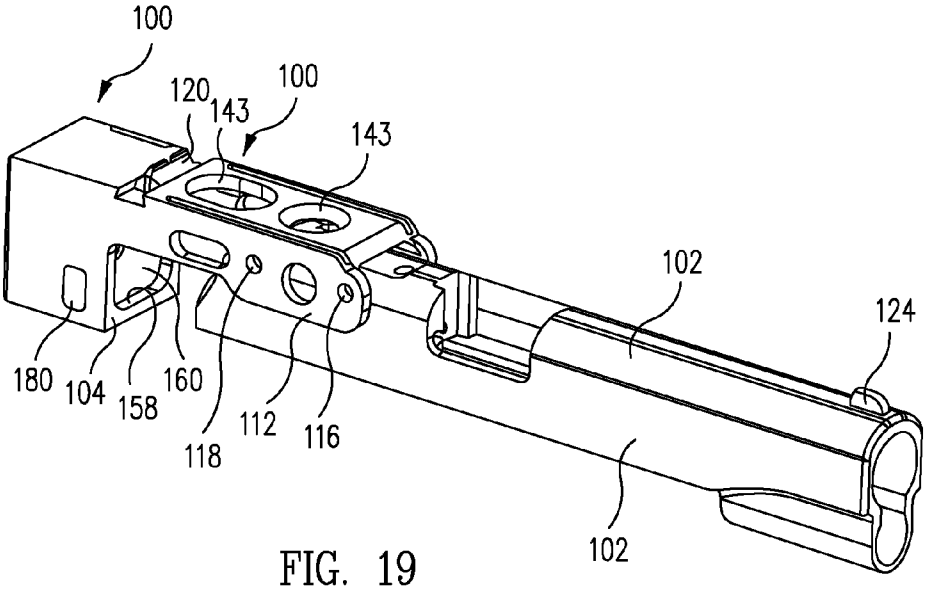
100
120
143
100
143
102
124
180
104
158
160
118
112
116
102

FIG. 19

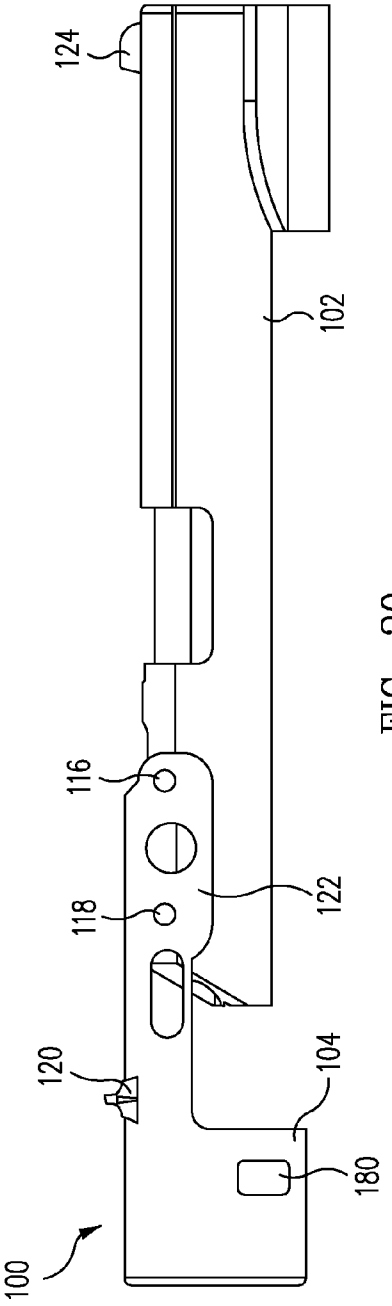
124
102
116
122
118
120
104
180
100

FIG. 20

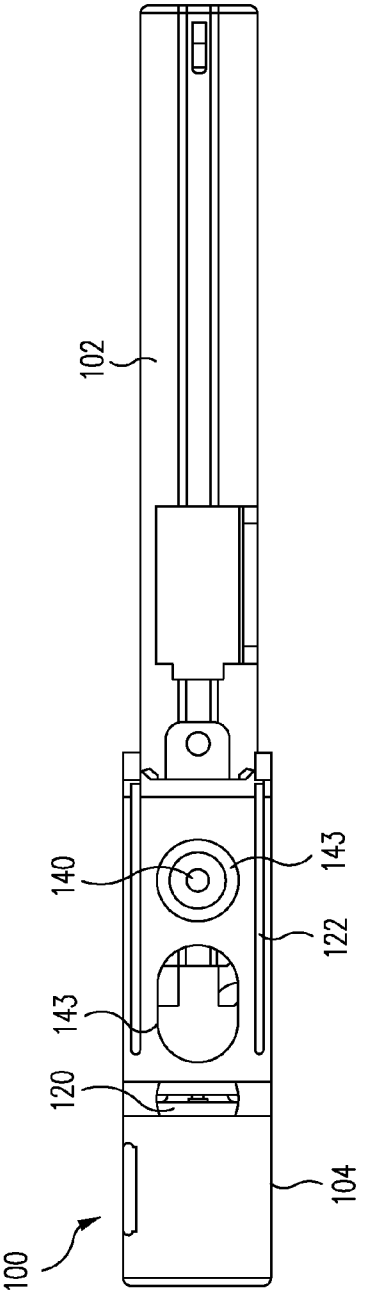
102
140
143
122
143
120
104
100

FIG. 21

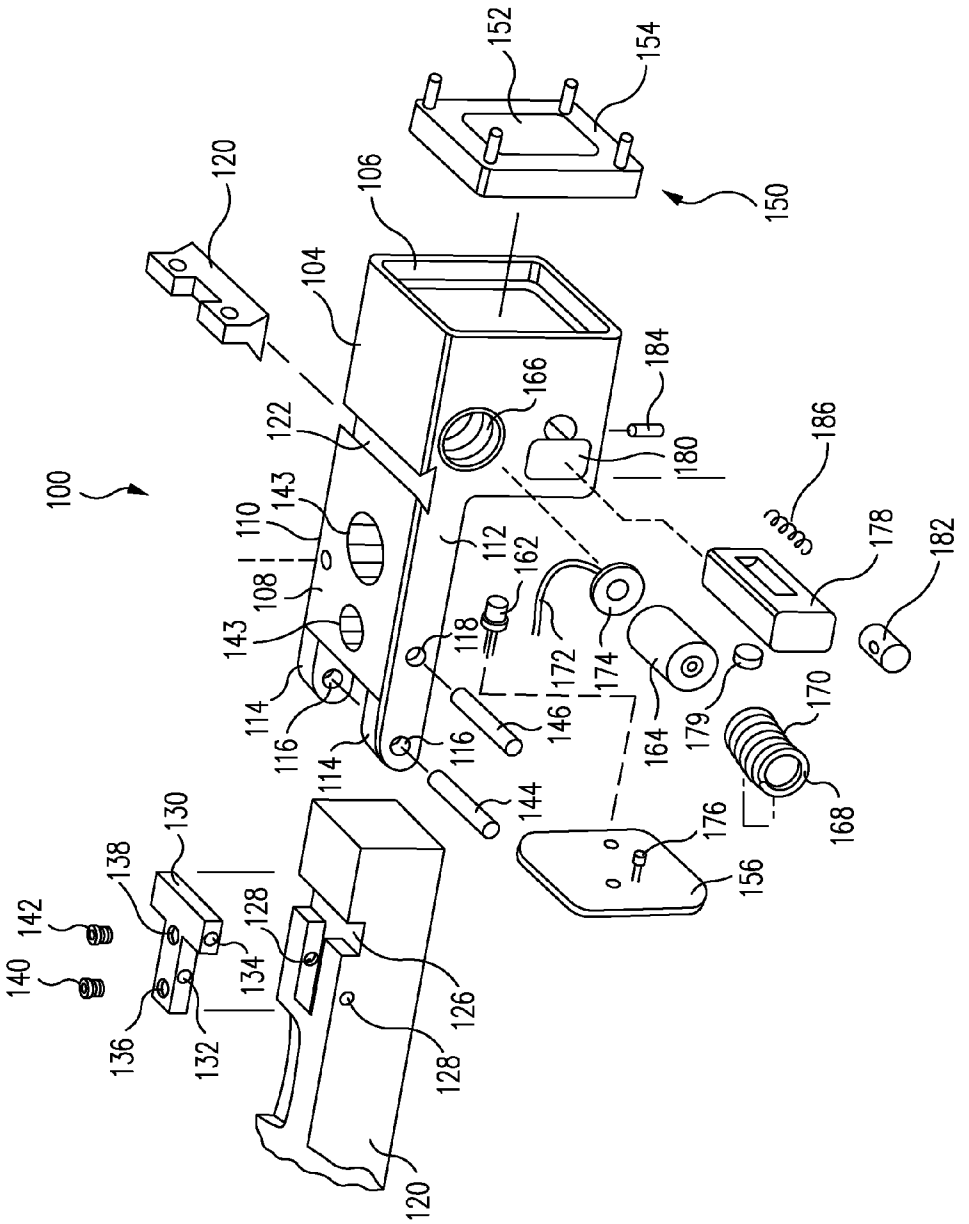
100
104
106
108
110
112
114
116
118
120
122
126
128
130
132
134
136
138
140
142
143
144
146
150
152
154
156
162
164
166
168
170
172
174
176
178
179
180
182
184
186

FIG. 22

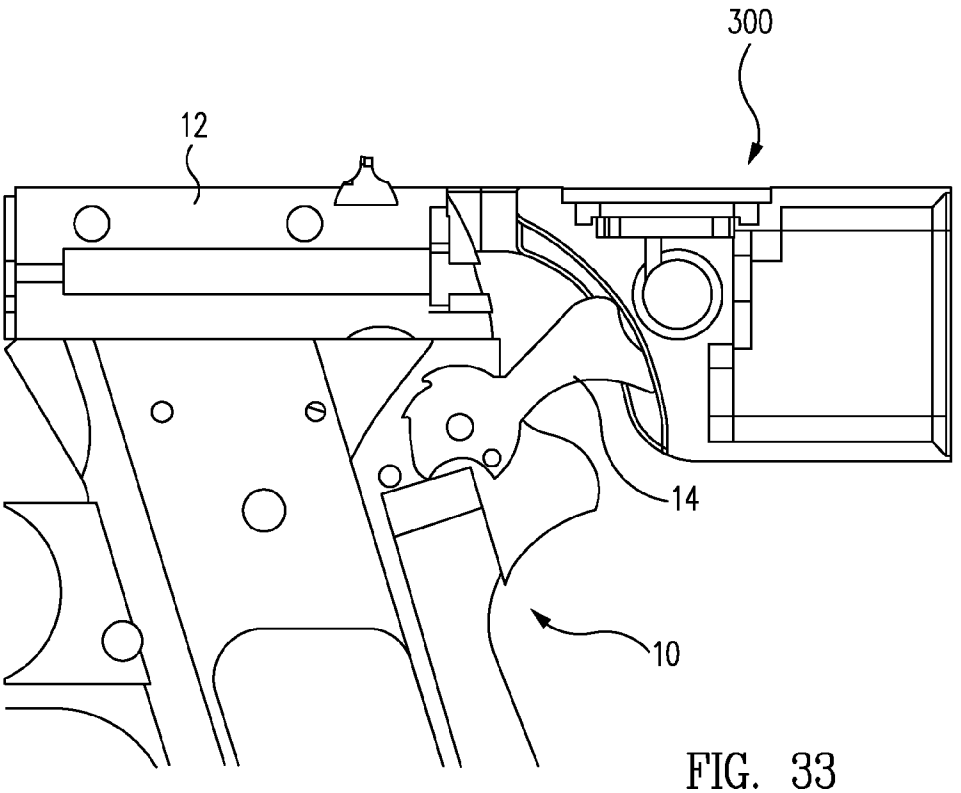

FIG. 33

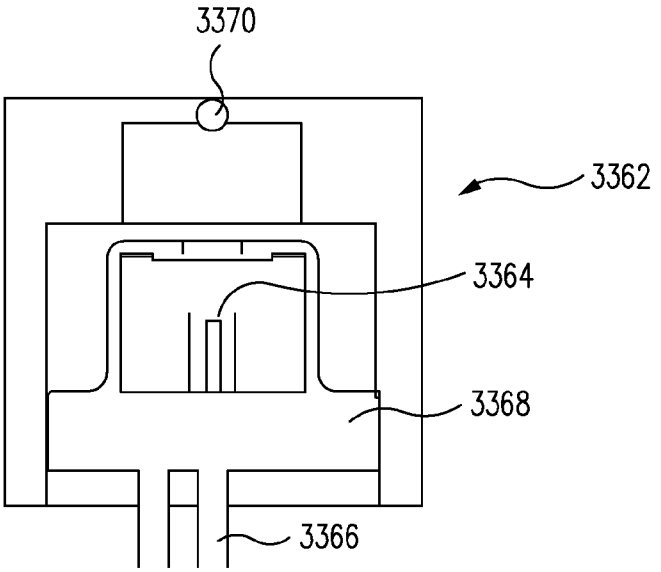

FIG. 23

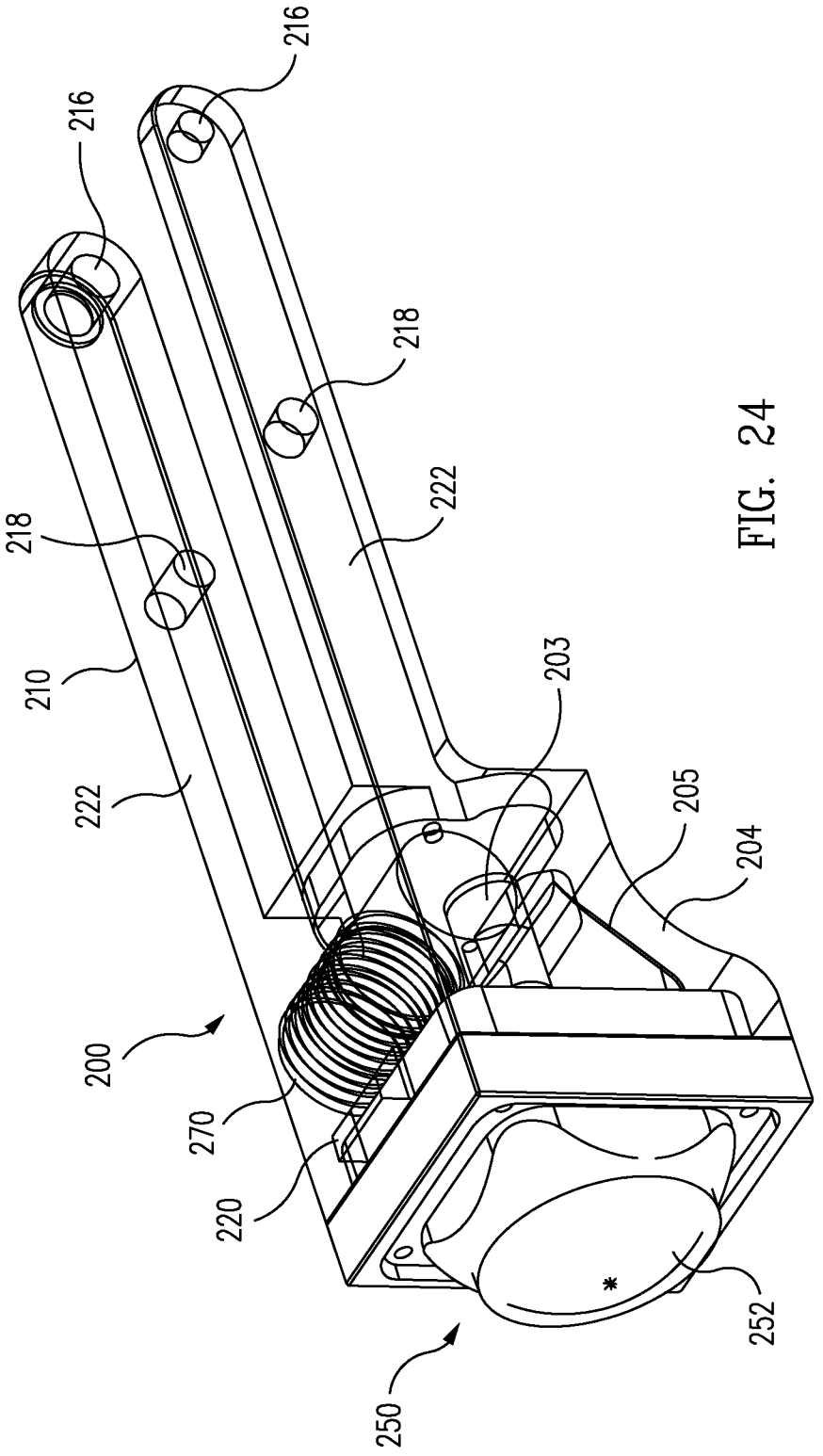

FIG. 24

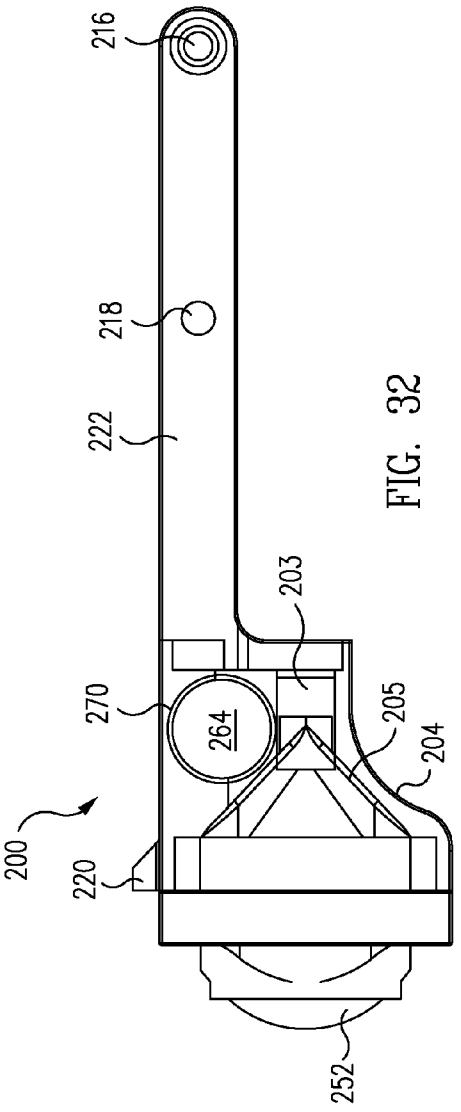
216
218
222
203
270
264
205
204
200
220
252

FIG. 32

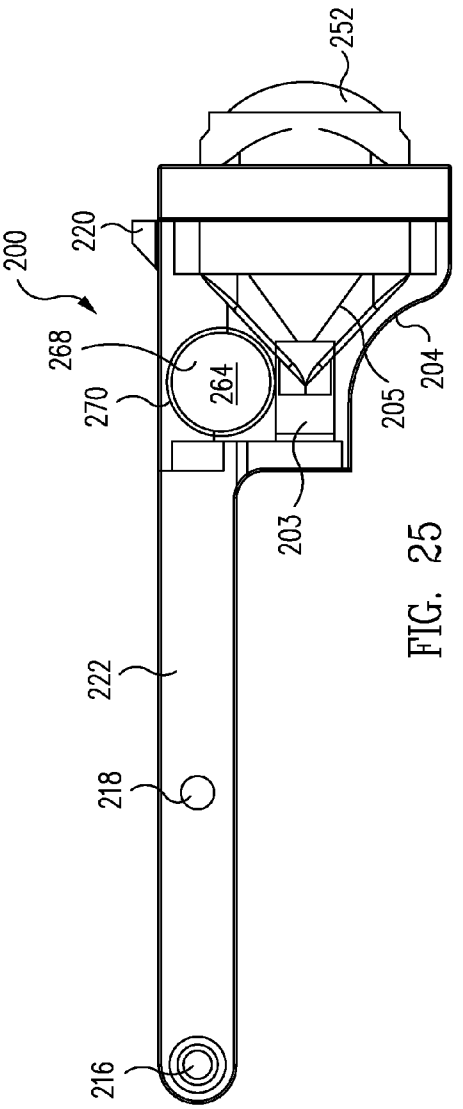
252
220
200
268
264
270
205
204
203
222
218
216

FIG. 25

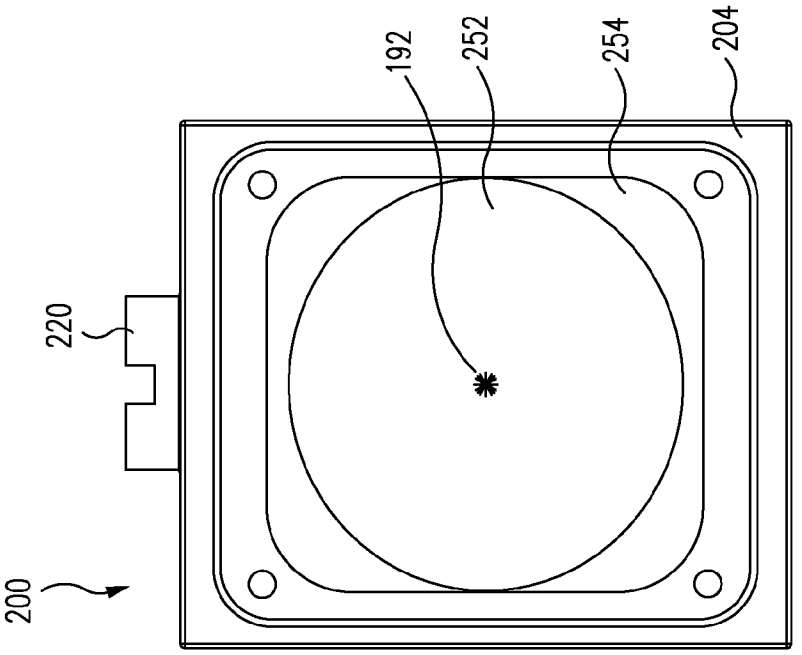

FIG. 27

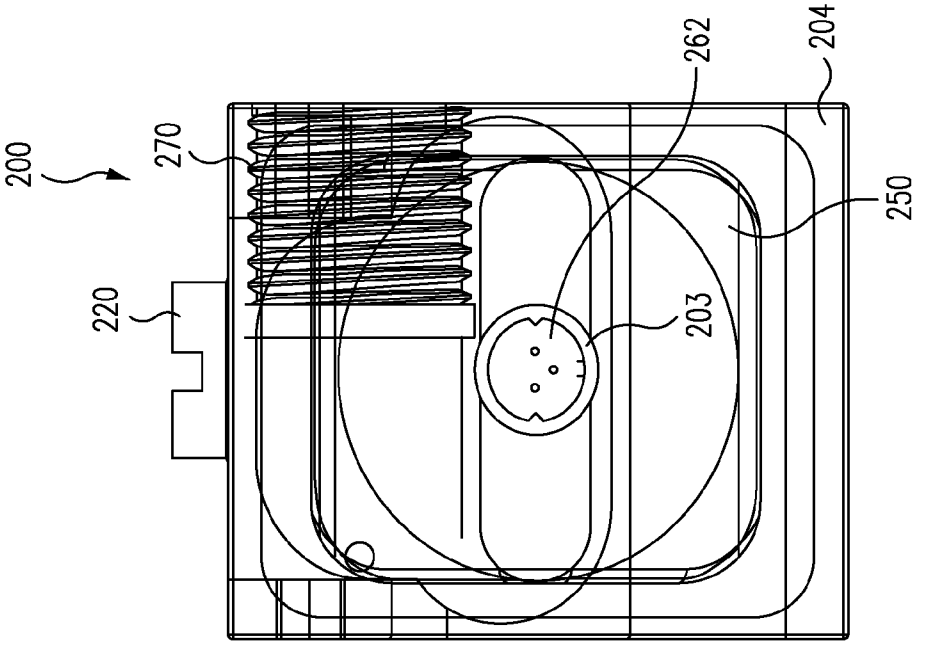

FIG. 26

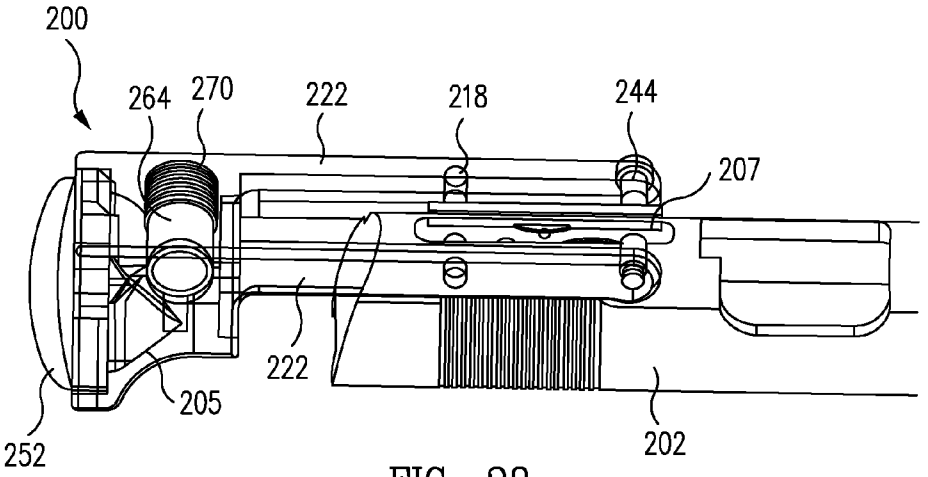
200
264
270
222
218
244
207
222
205
252
202

FIG. 28

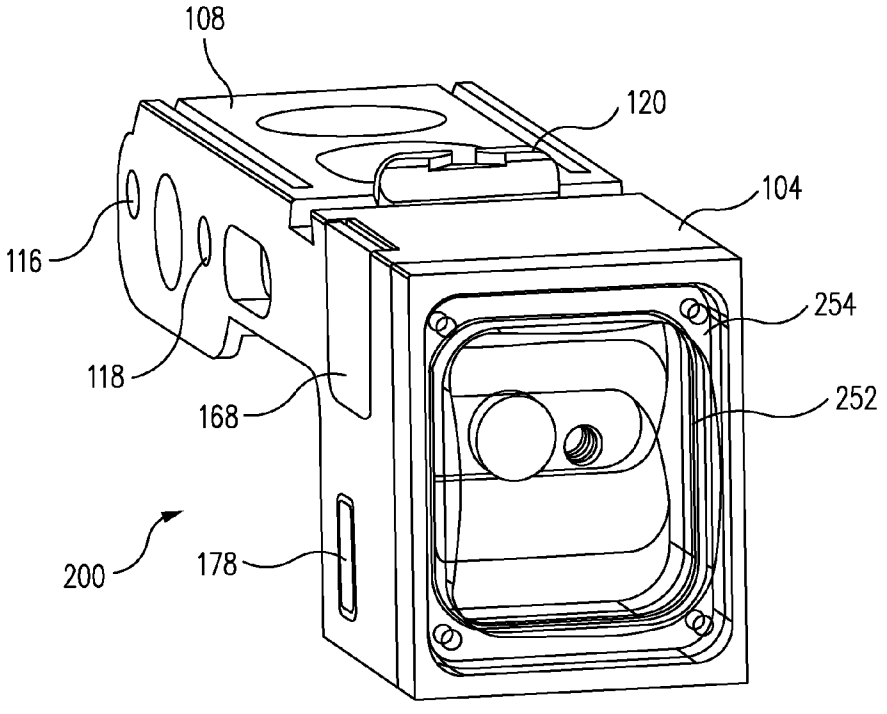
108
120
104
116
254
118
168
252
200
178

FIG. 29

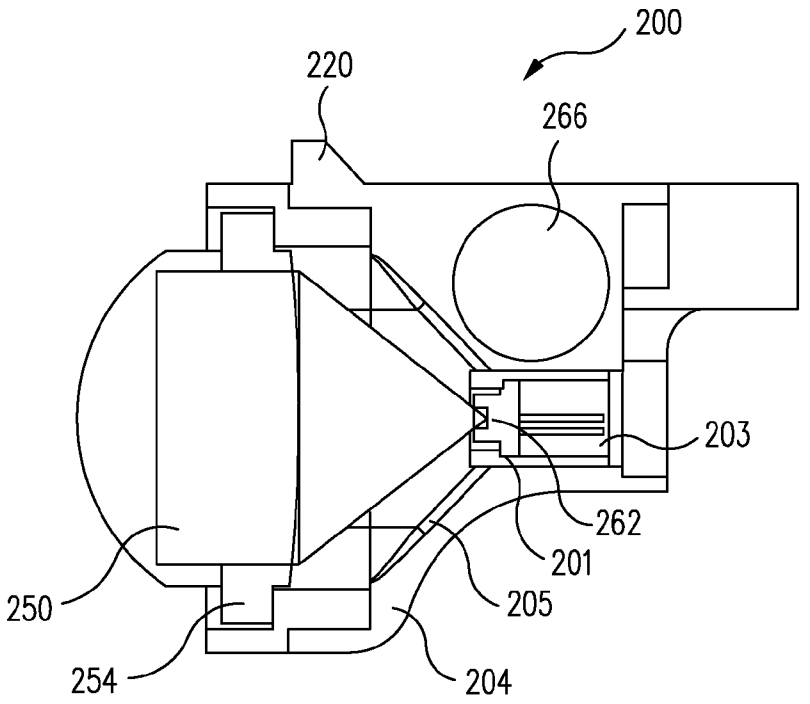
200
220
266
203
262
201
205
250
254
204

FIG. 30

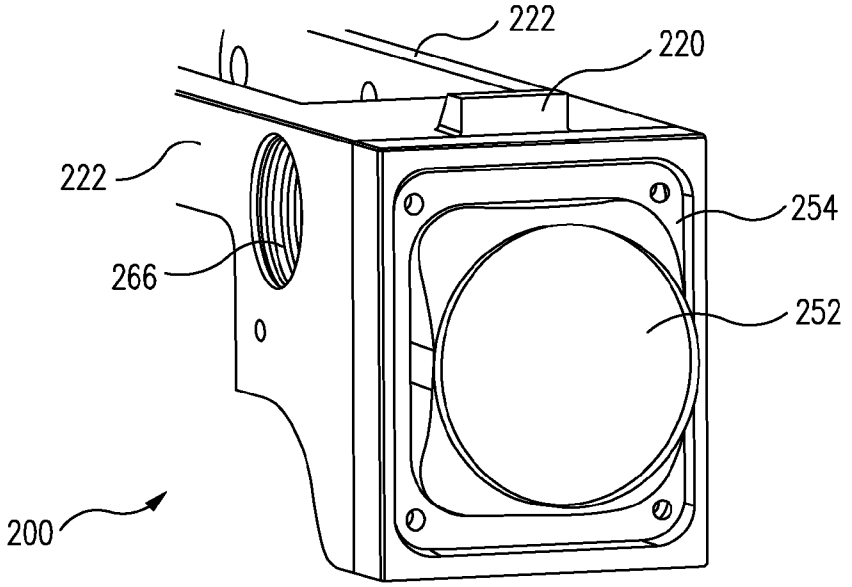
222
220
222
254
266
252
200

FIG. 31

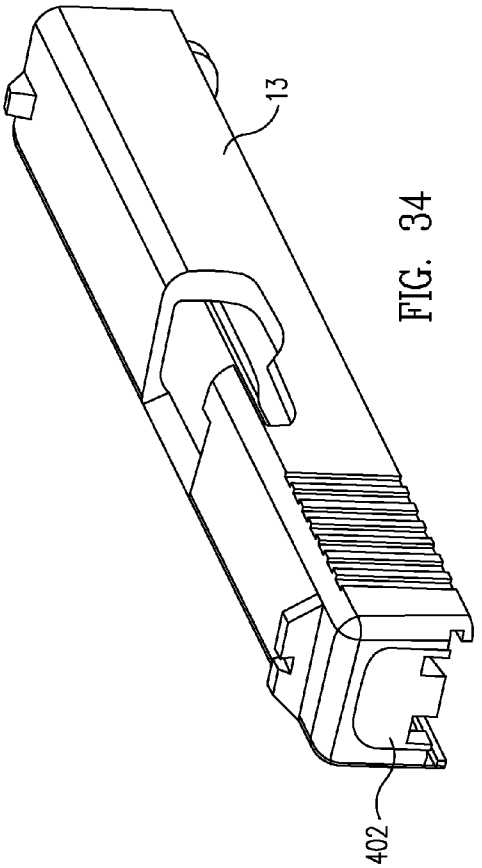

FIG. 34

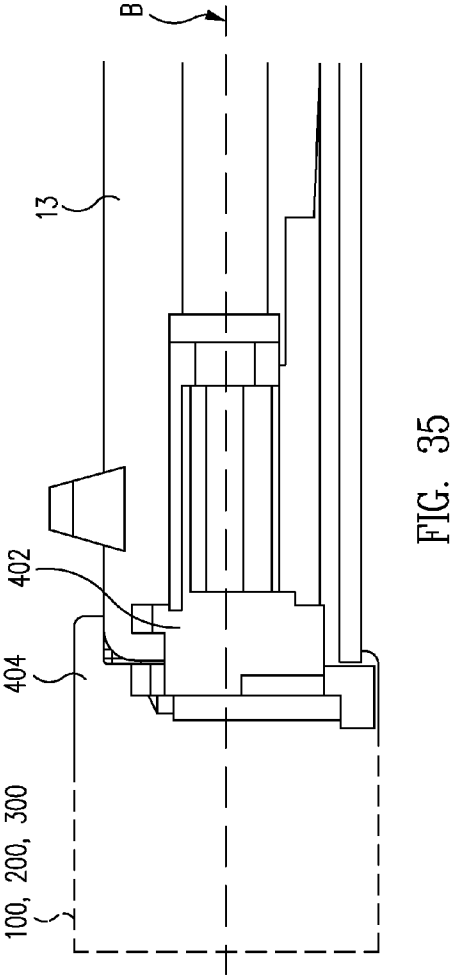

FIG. 35

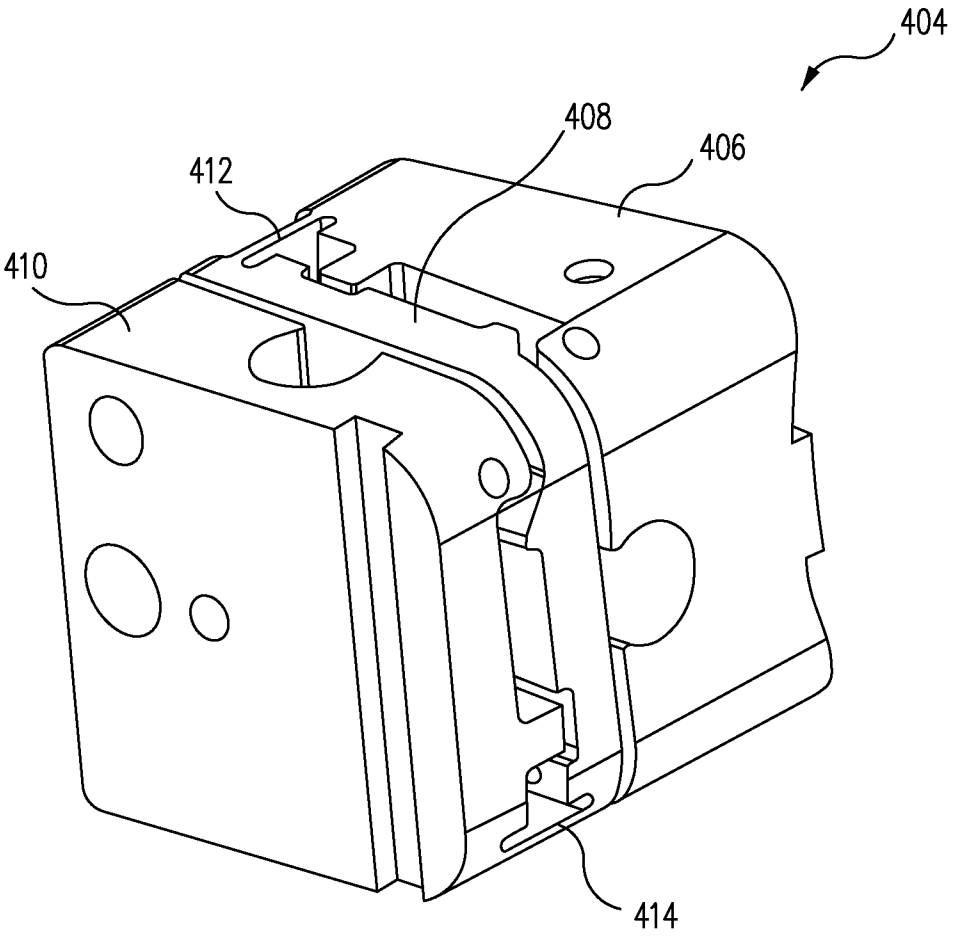

FIG. 36

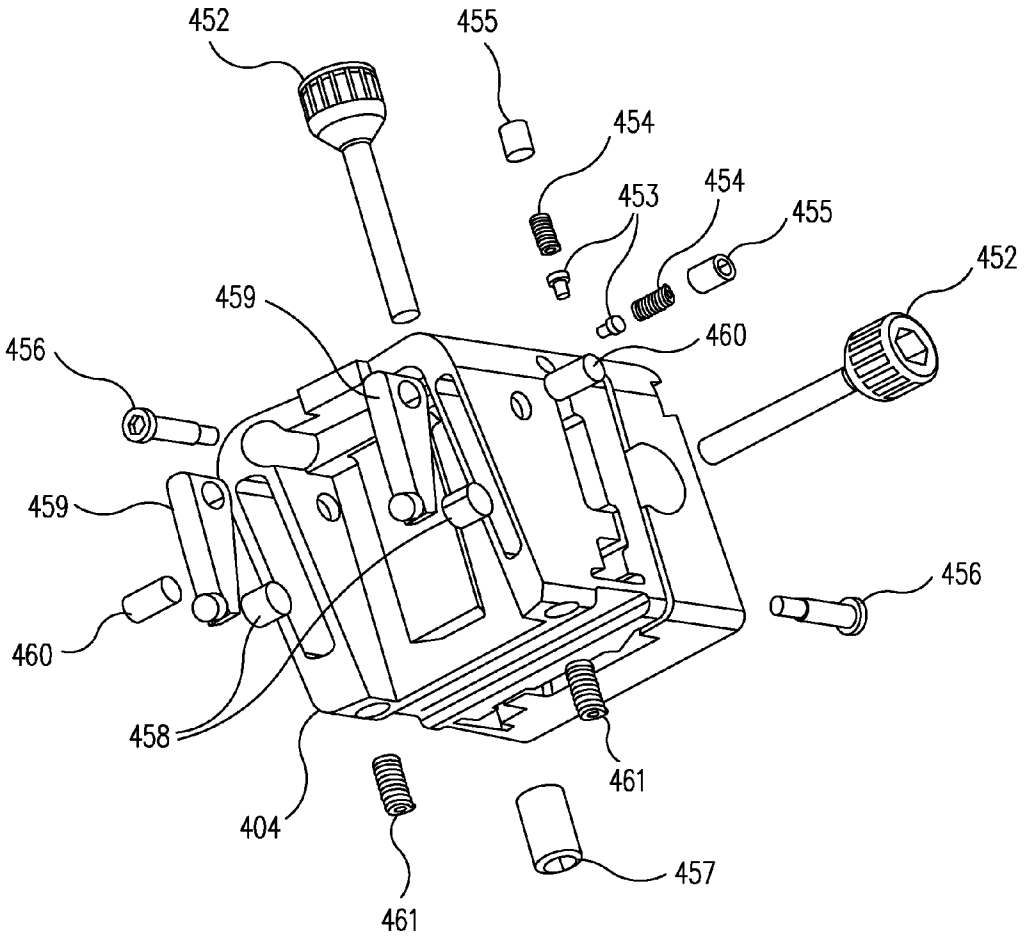
452
455
454
453
454
455
452
459
460
456
459
456
460
458
461
404
457
461

FIG. 37

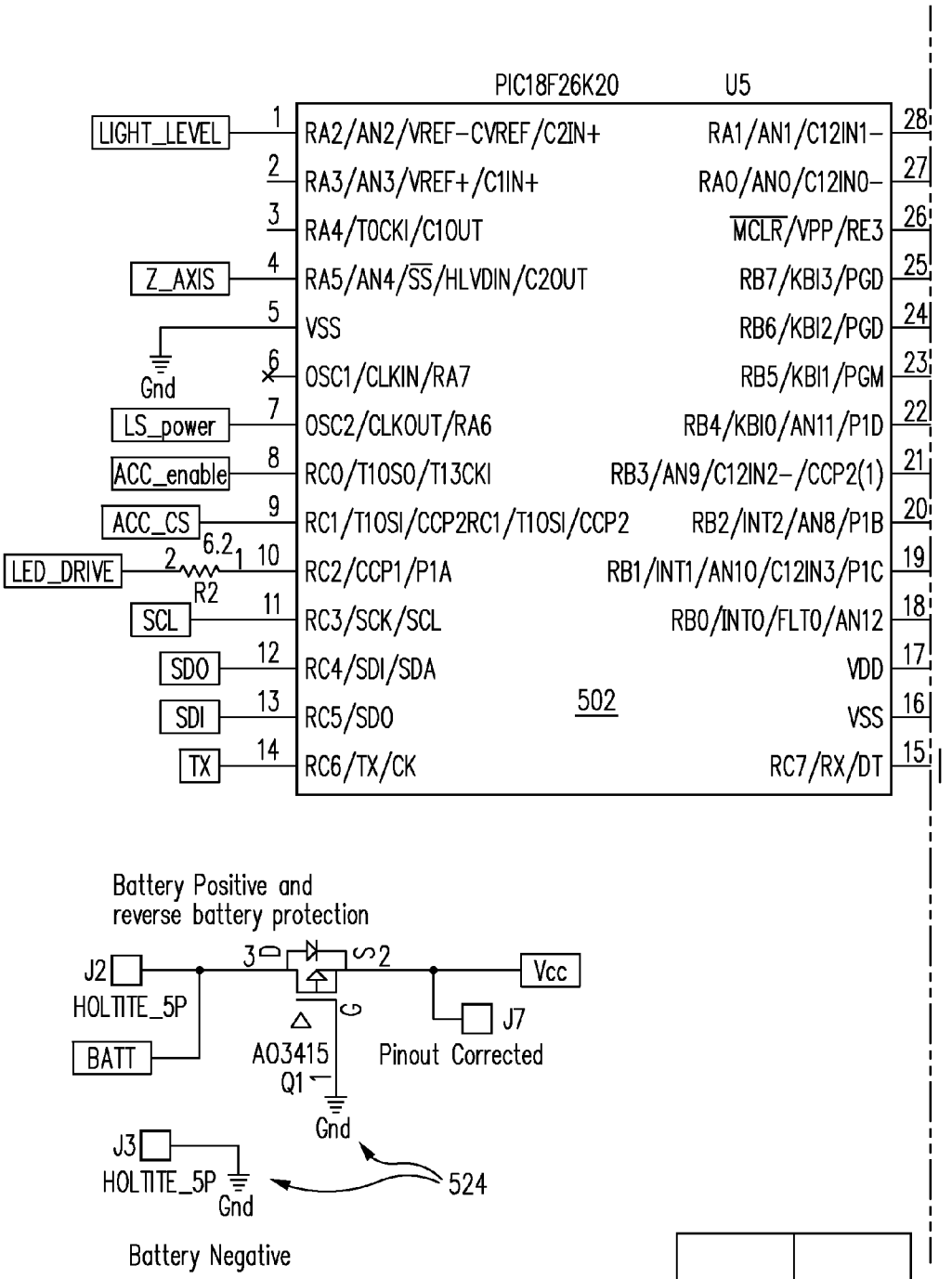

FIG. 38A

FIG. 38A	FIG. 38B

KEY TO FIG. 38

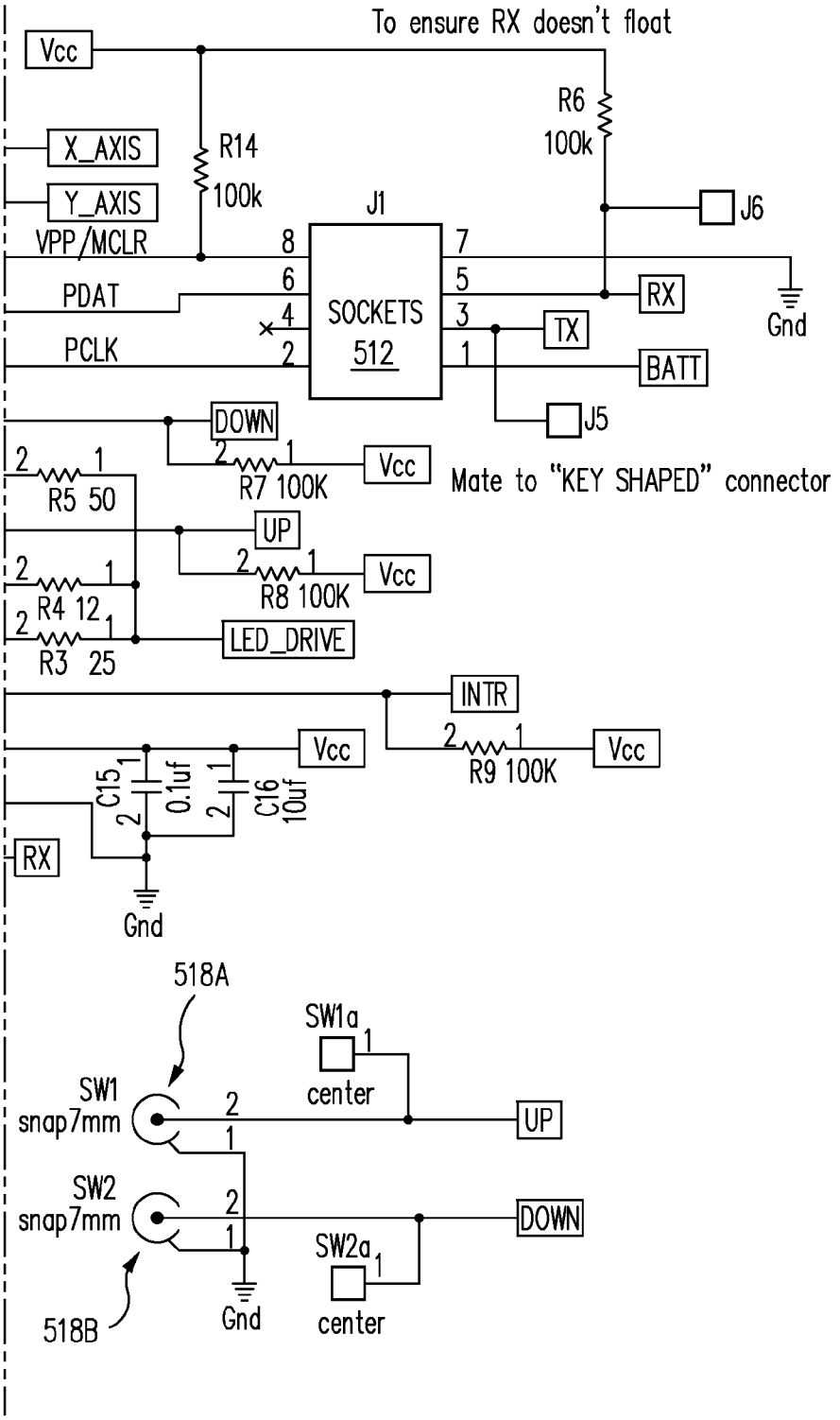
To ensure RX doesn't float
Vcc
R6
100k
X_AXIS
R14
100k
Y_AXIS
J1
J6
VPP/MCLR
8
7
PDAT
6
5
RX
SOCKETS
512
4
3
TX
Gnd
PCLK
2
1
BATT
J5
DOWN
2
1
R7 100K
Vcc
Mate to "KEY SHAPED" connector
2
1
R5 50
UP
2
1
R8 100K
Vcc
2
R4 12
1
2
R3 25
1
LED_DRIVE
INTR
Vcc
Vcc
2
1
R9 100K
C15
0.1uf
C16
10uf
RX
Gnd
518A
SW1a
1
SW1
snap7mm
2
center
UP
1
SW2
snap7mm
2
DOWN
1
SW2a
1
518B
Gnd
center

FIG. 38B

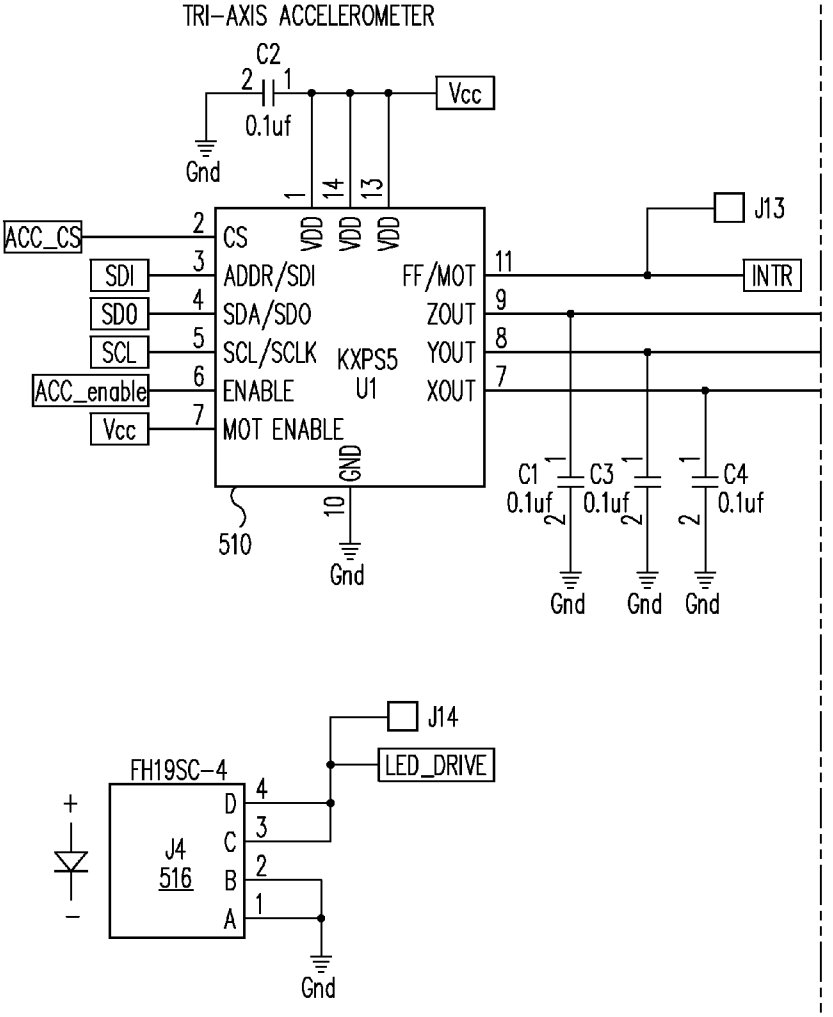

FIG. 39A FIG. 39B

KEY TO FIG. 39

FIG. 39A

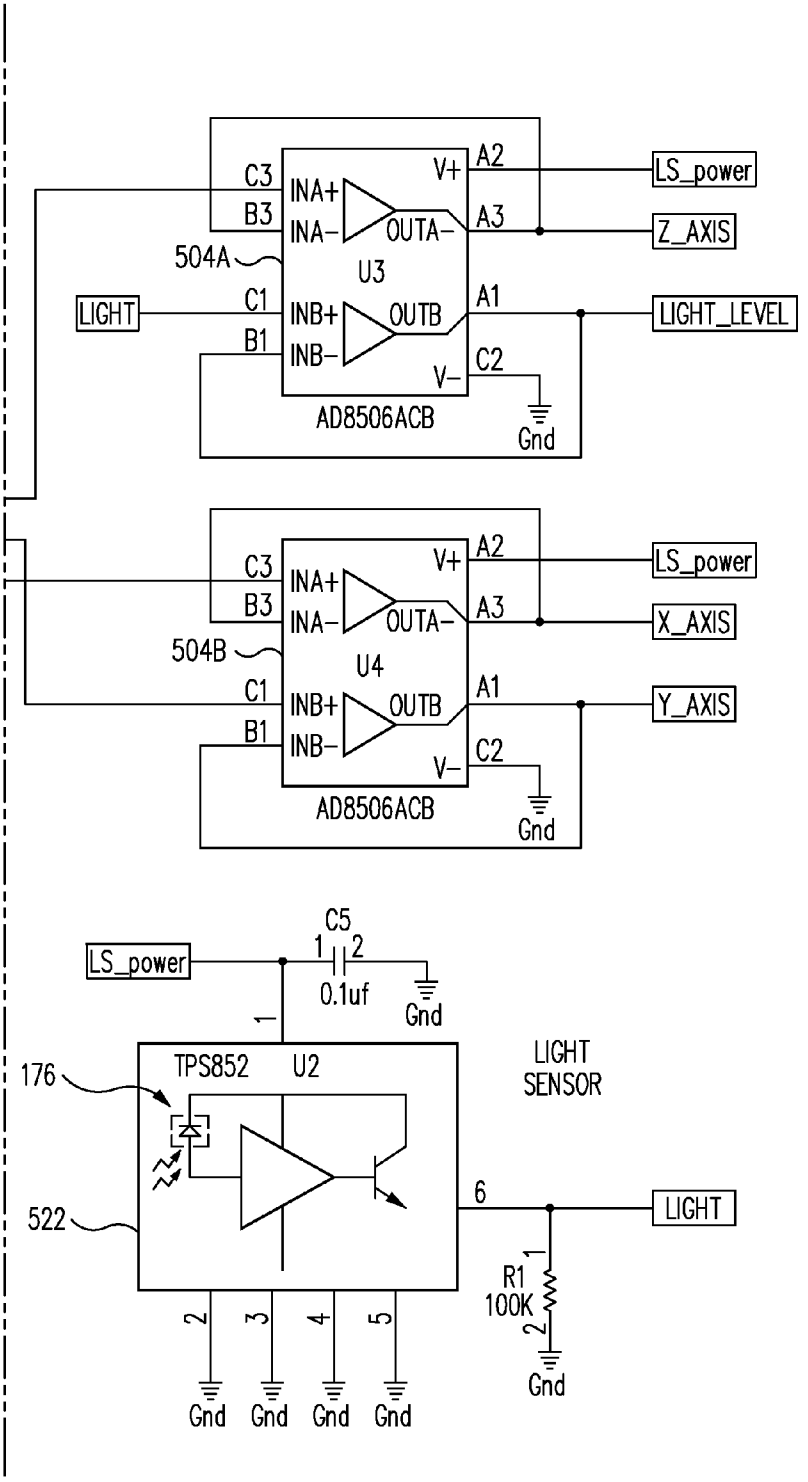
C3
B3
INA+
INA−
V+
OUTA−
A2
A3
LS_power
Z_AXIS
504A
U3
LIGHT
C1
B1
INB+
INB−
OUTB
A1
LIGHT_LEVEL
V−
C2
AD8506ACB
Gnd
C3
B3
INA+
INA−
V+
OUTA−
A2
A3
LS_power
X_AXIS
504B
U4
C1
B1
INB+
INB−
OUTB
A1
Y_AXIS
V−
C2
AD8506ACB
Gnd
C5
LS_power
0.1uf
Gnd
TPS852
U2
LIGHT
SENSOR
176
522
6
LIGHT
R1
100K
Gnd
Gnd
Gnd
Gnd
Gnd

FIG. 39B

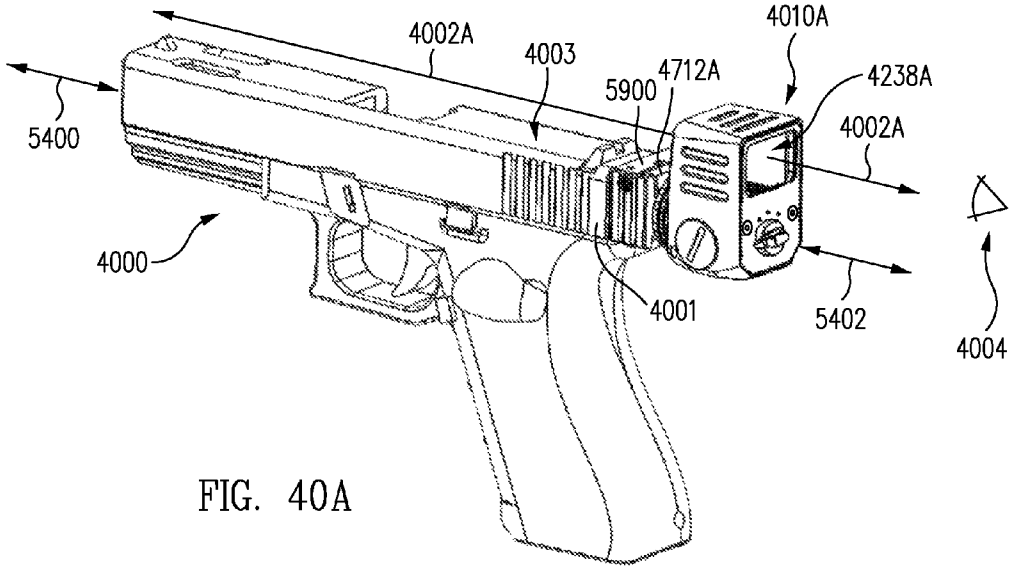

FIG. 40A

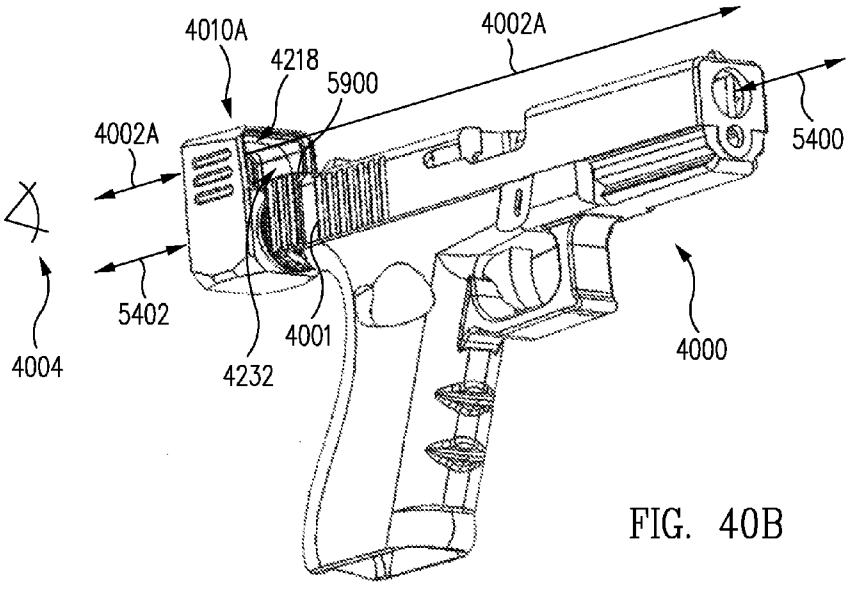

FIG. 40B

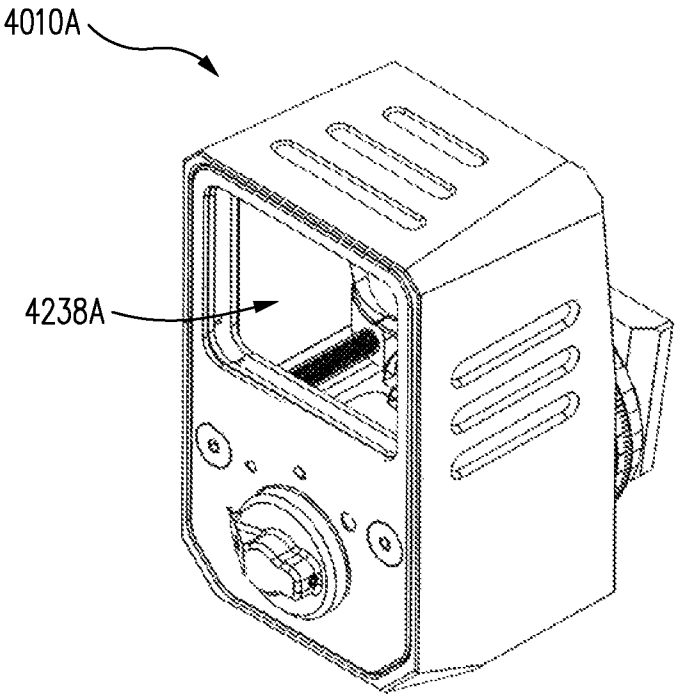

FIG. 41A

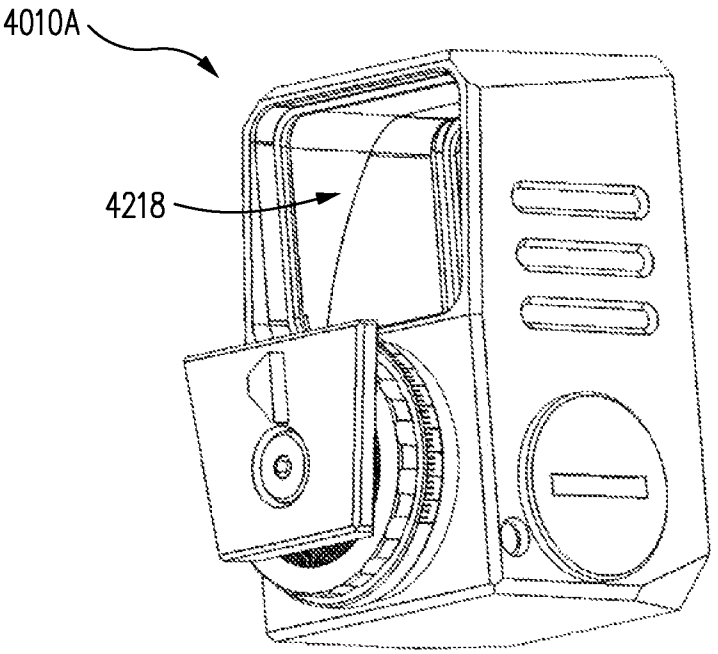

FIG. 41B

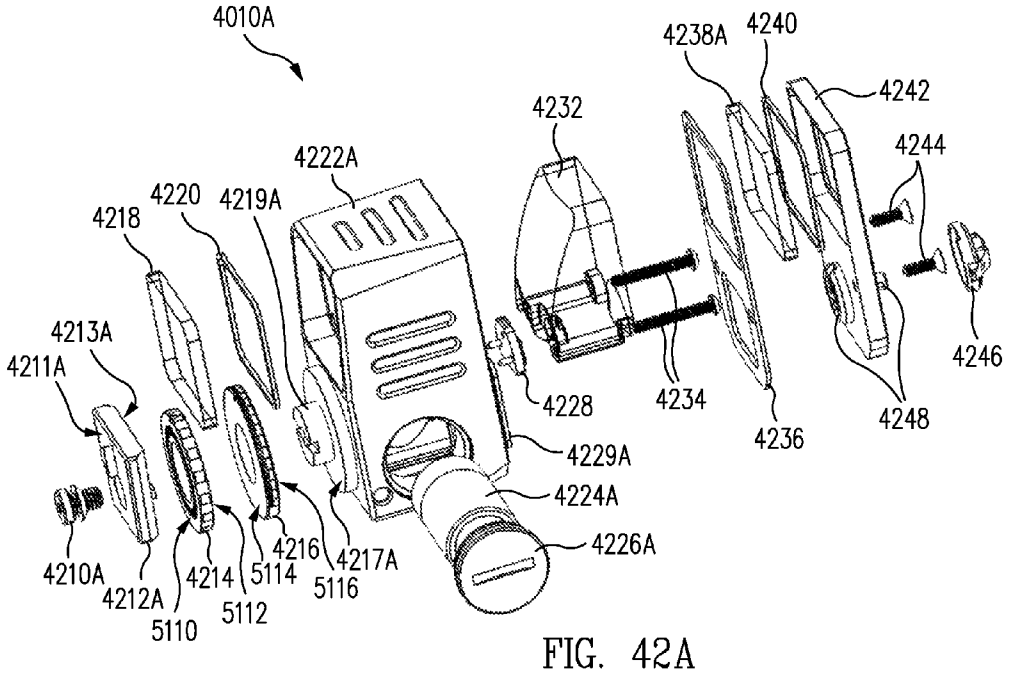

FIG. 42A

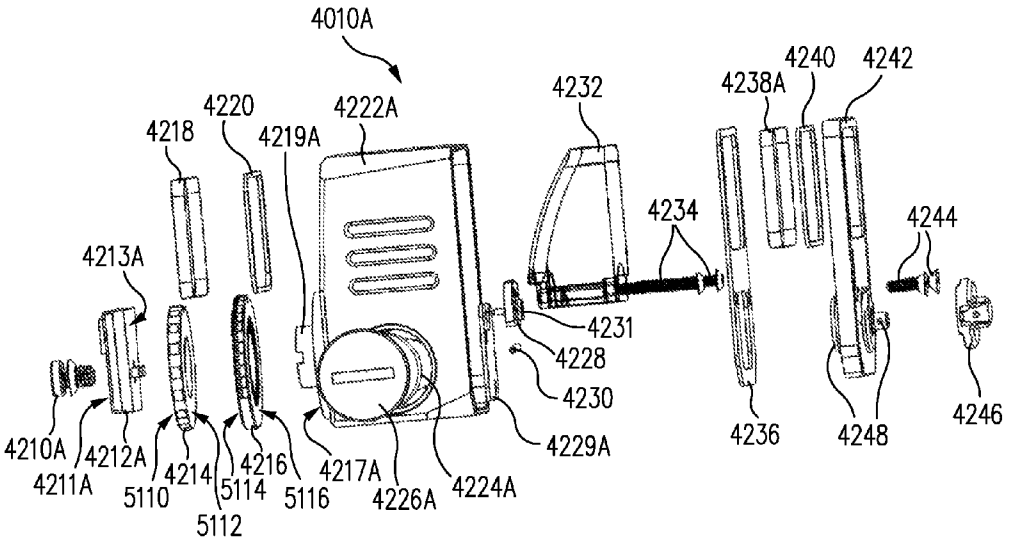

FIG. 42B

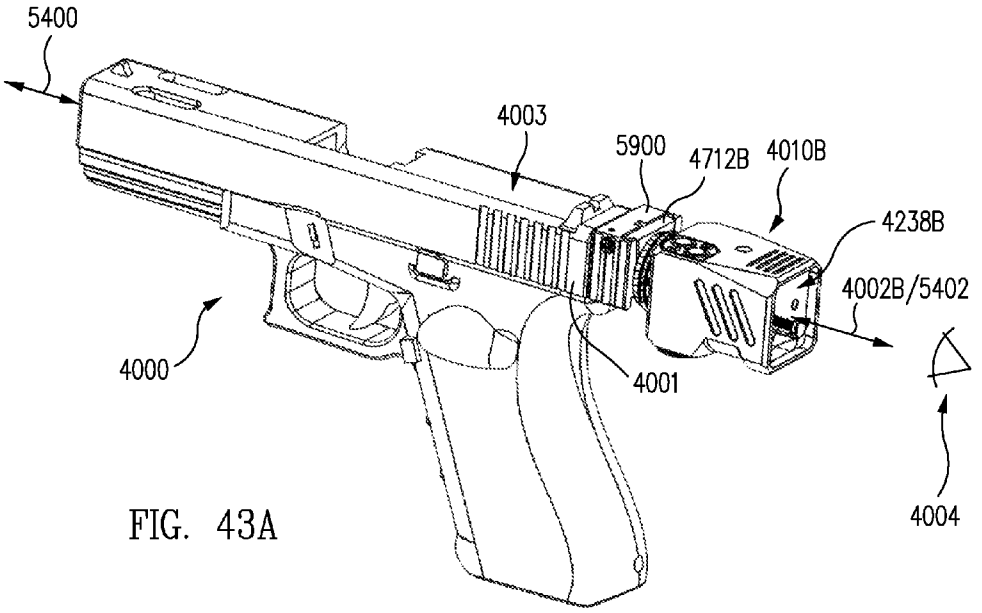

FIG. 43A

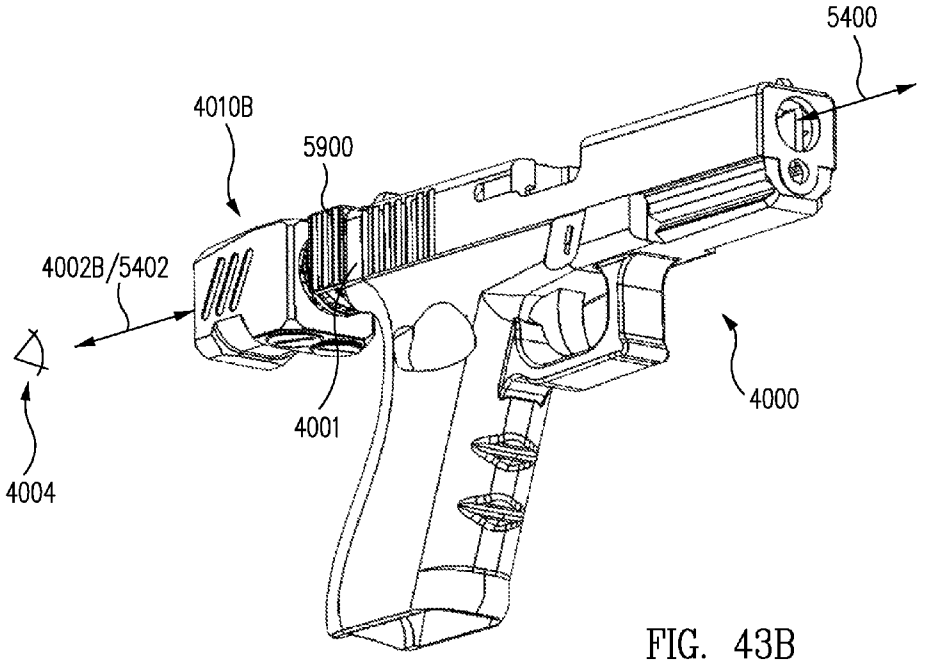

FIG. 43B

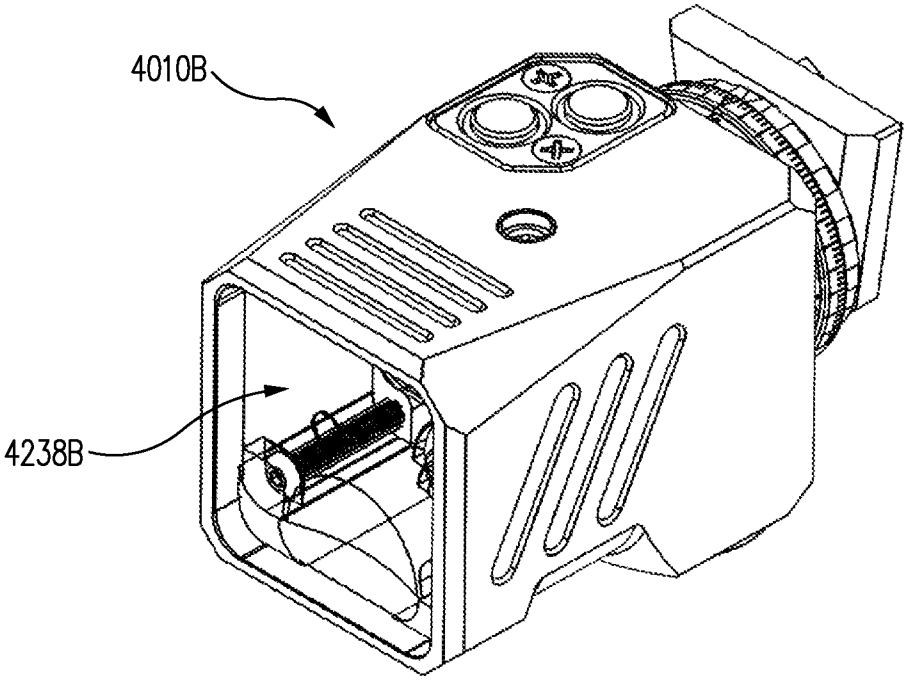

FIG. 44A

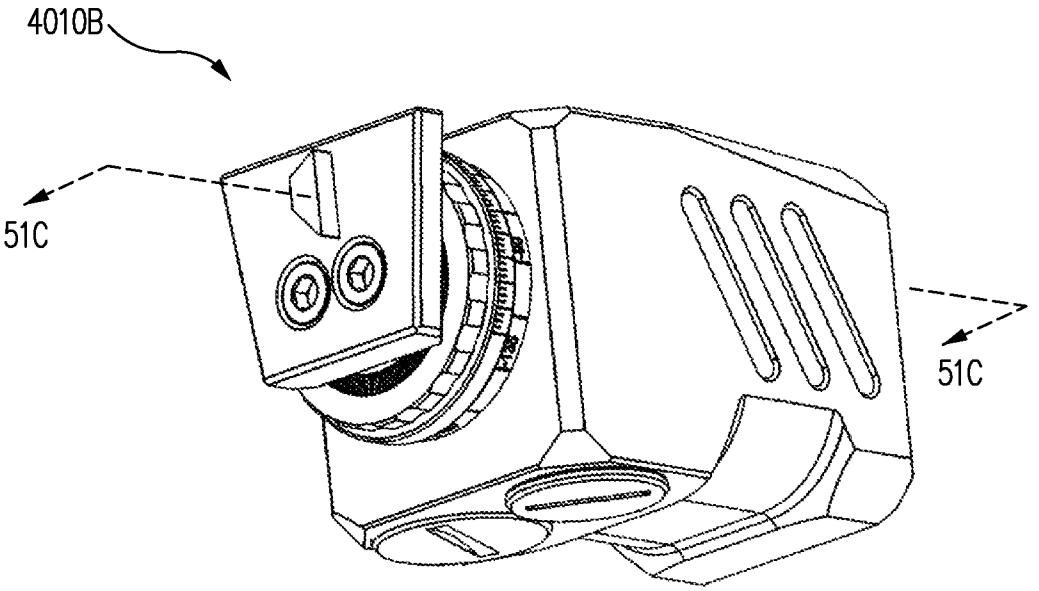

FIG. 44B

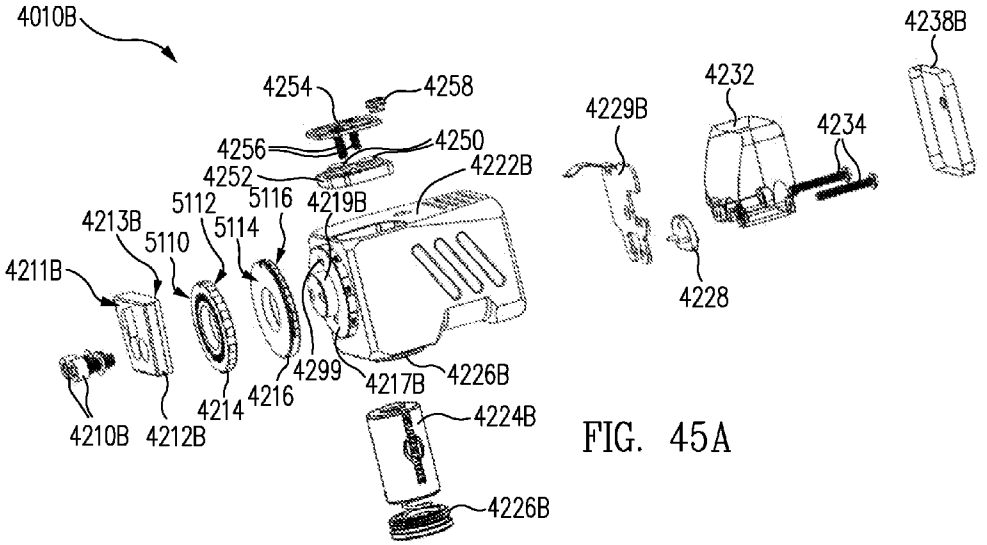

FIG. 45A

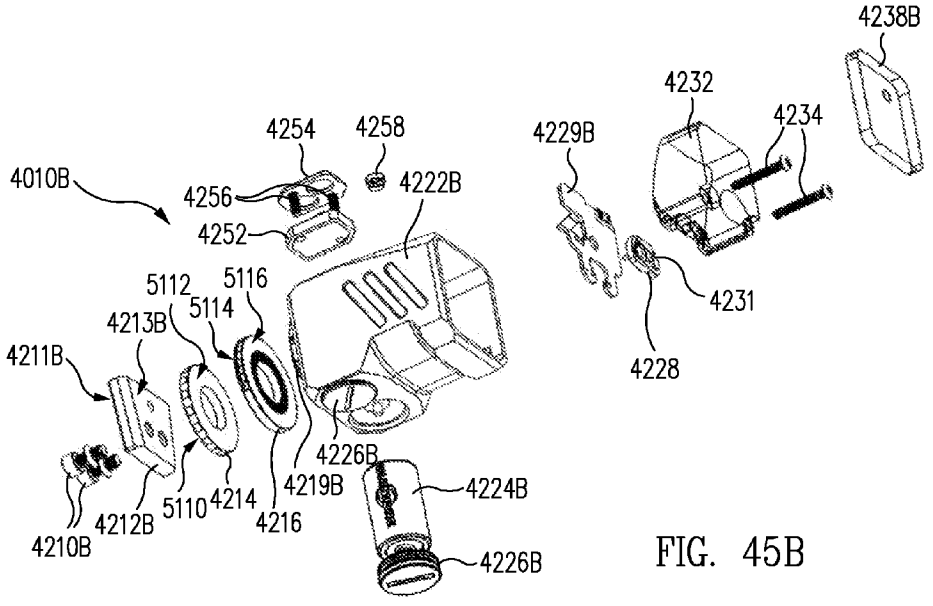

FIG. 45B

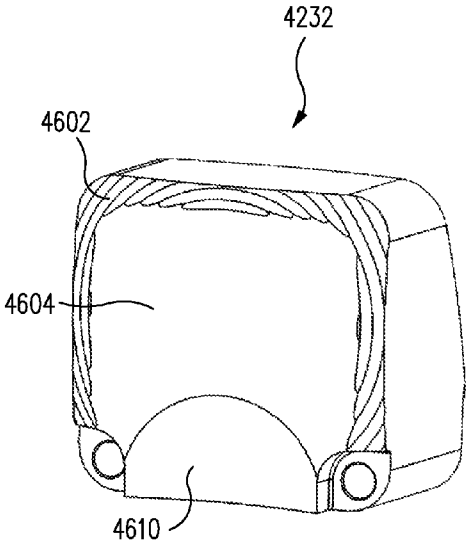

FIG. 46A

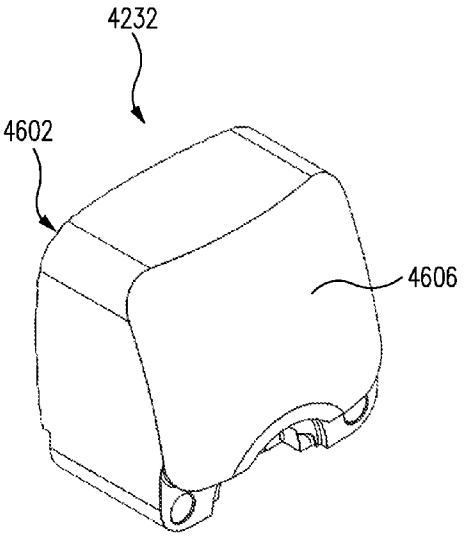

FIG. 46B

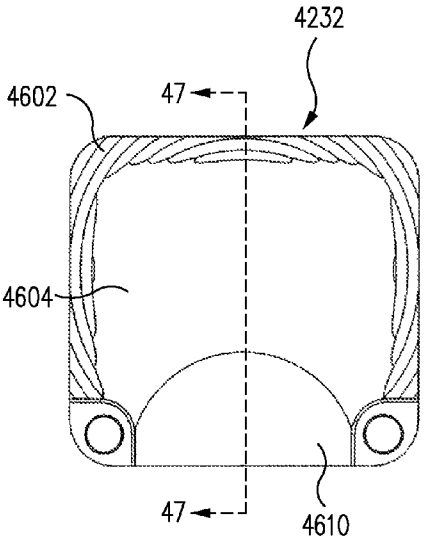

FIG. 46C

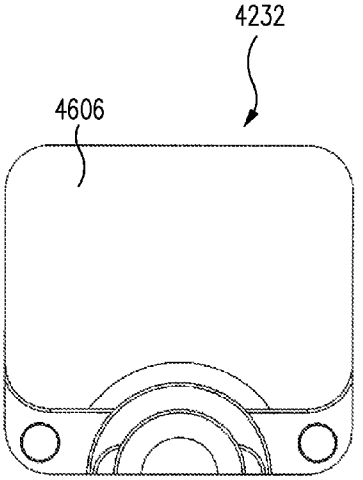

FIG. 46D

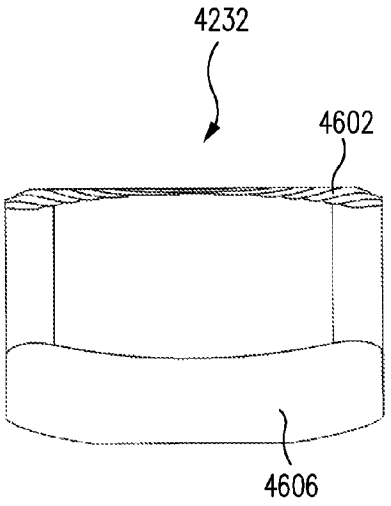

FIG. 46E

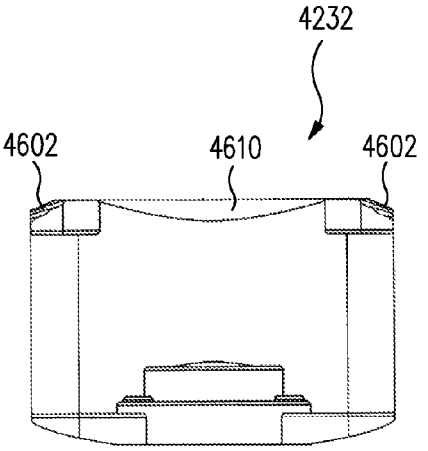

FIG. 46F

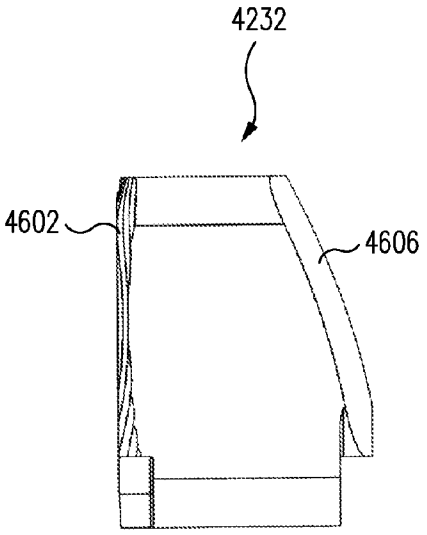

FIG. 46G

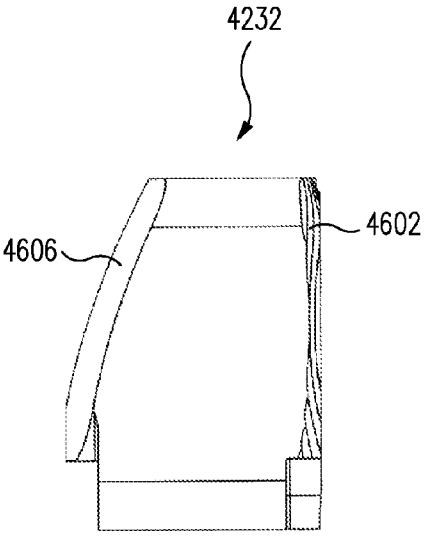

FIG. 46H

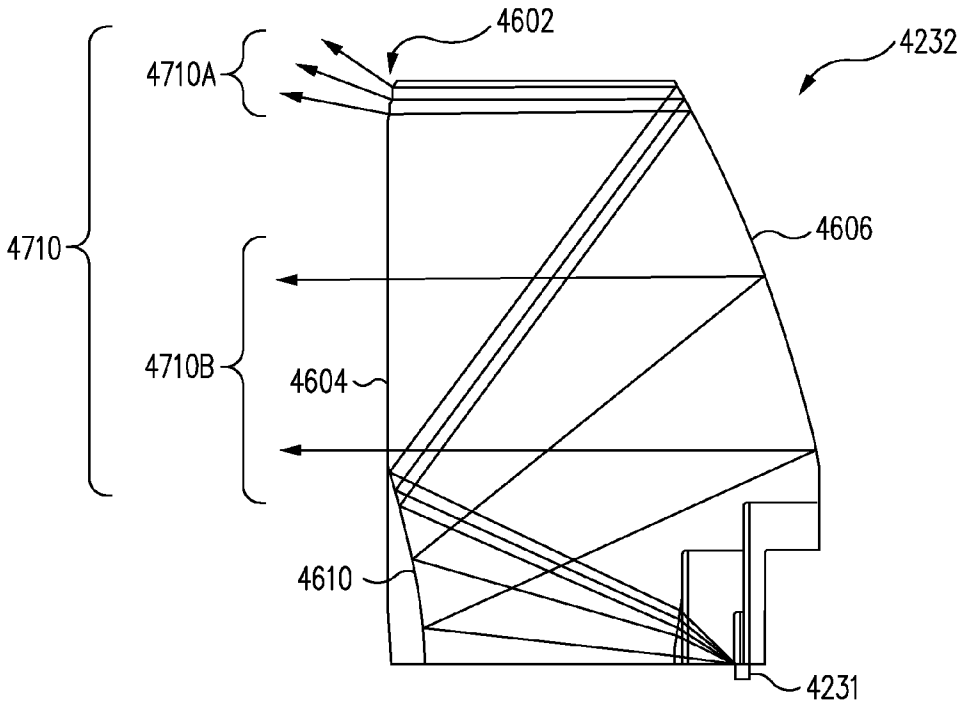
4602
4232
4710A
4710
4606
4710B
4604
4610
4231

FIG. 47

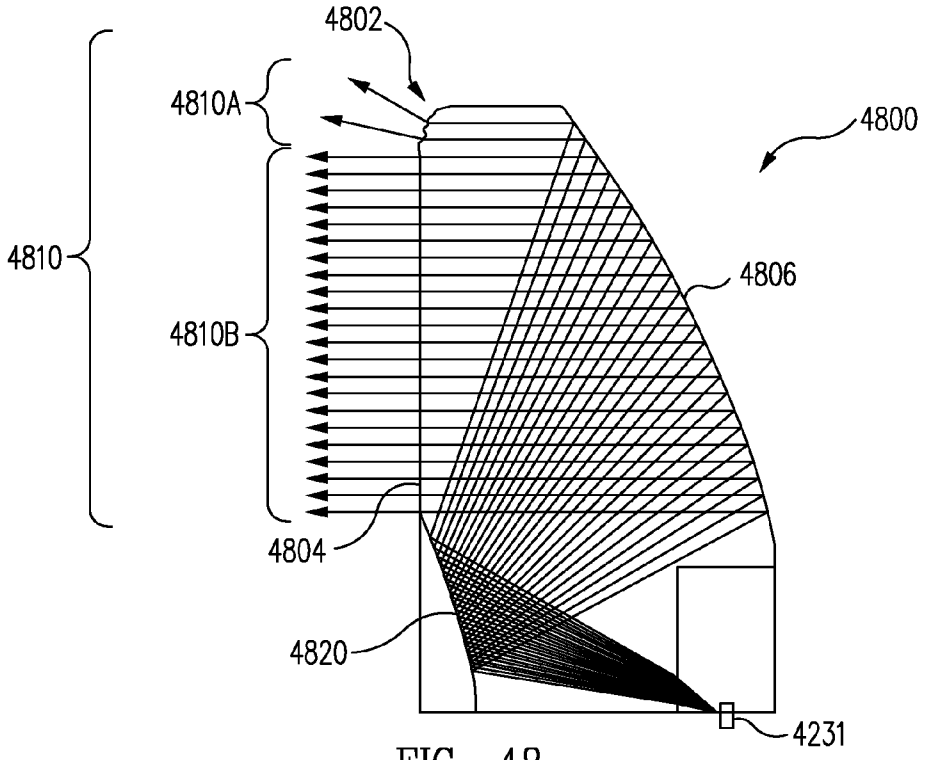
4802
4810A
4800
4810
4806
4810B
4804
4820
4231

FIG. 48

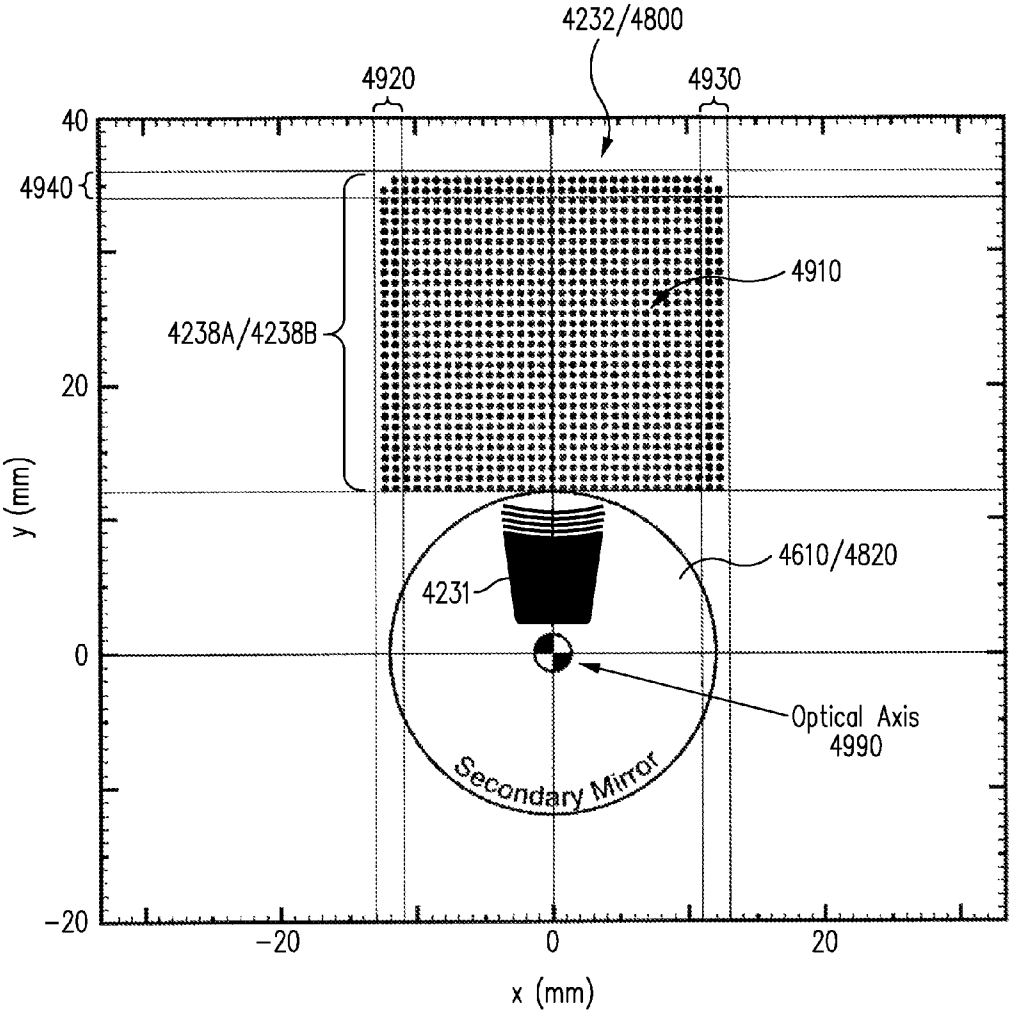
4232/4800
4920
4930
40
4940
4910
4238A/4238B
20
y (mm)
4610/4820
4231
0
Optical Axis
4990
Secondary Mirror
-20
-20
0
20
x (mm)

FIG. 49A

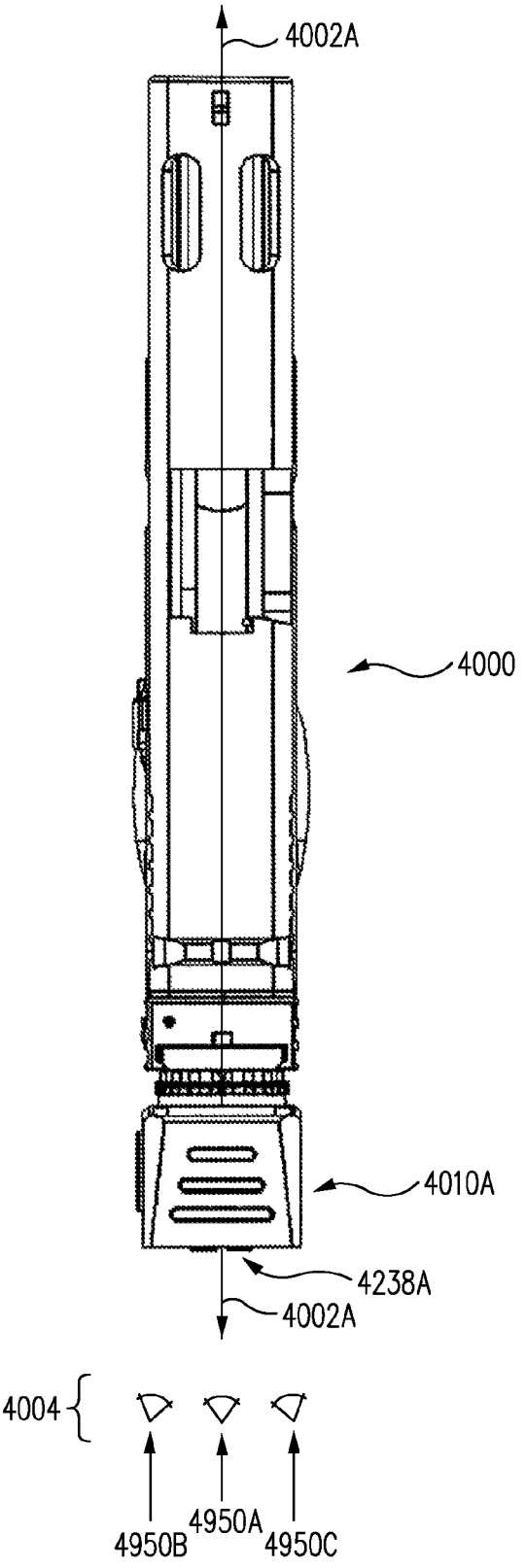

FIG. 49B

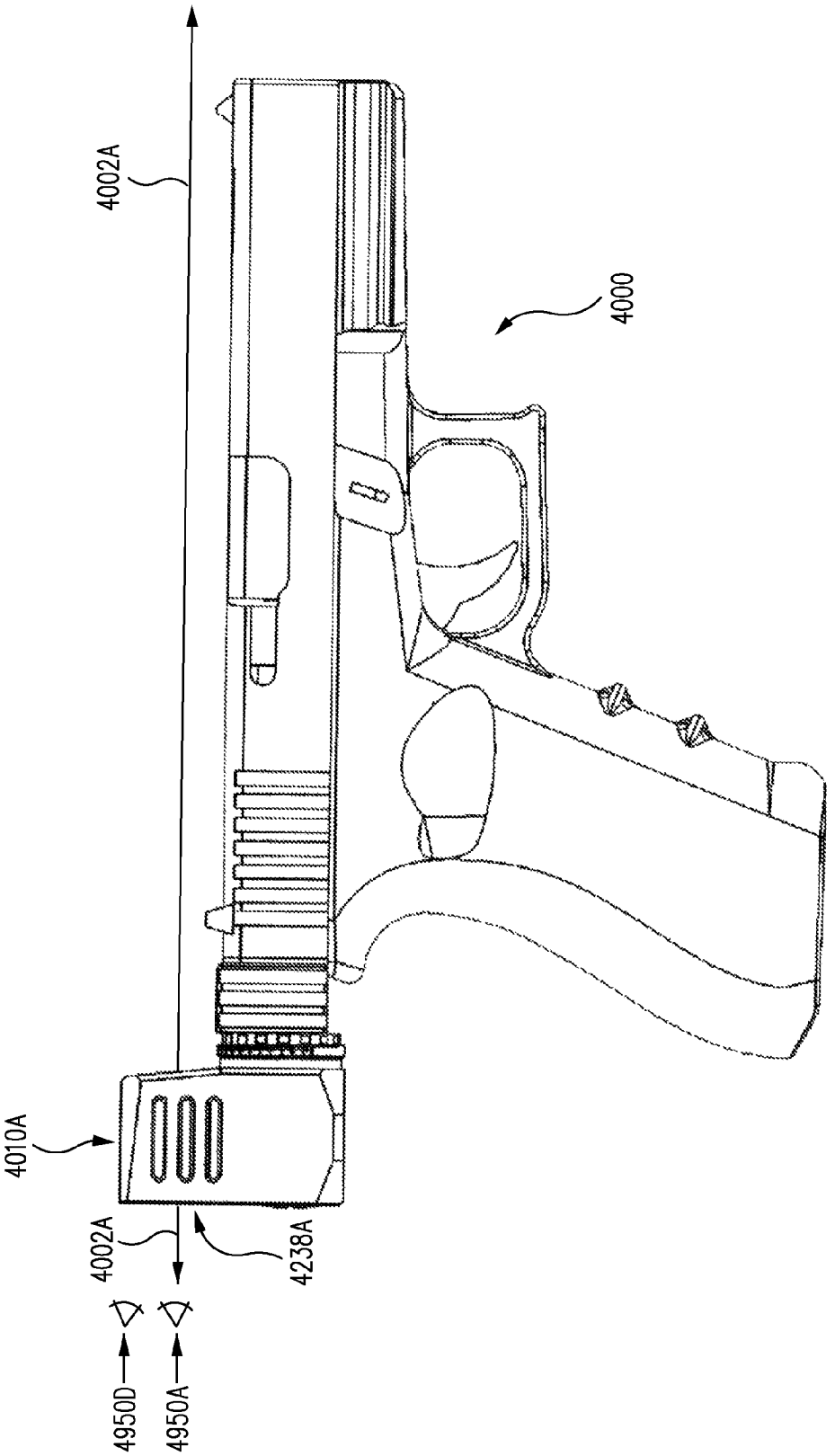

FIG. 49C

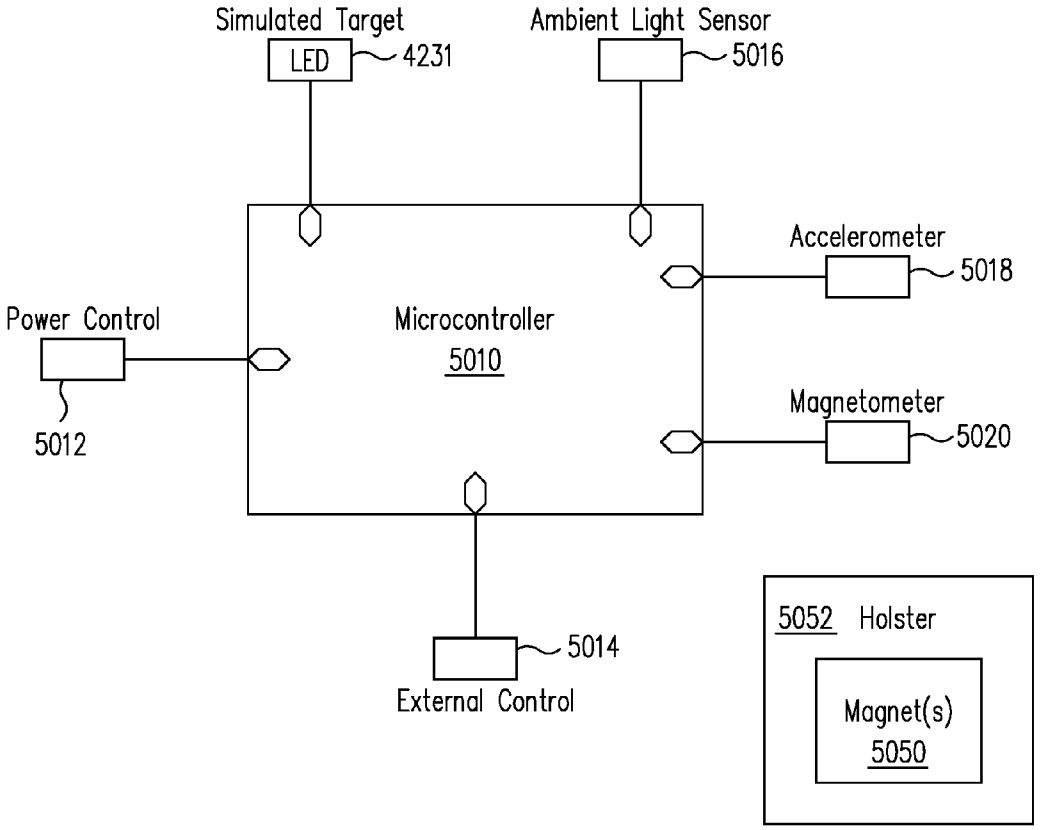
Simulated Target
LED
4231
Ambient Light Sensor
5016
Accelerometer
5018
Power Control
5012
Microcontroller
5010
Magnetometer
5020
5014
External Control
5052 Holster
Magnet(s)
5050

FIG. 50

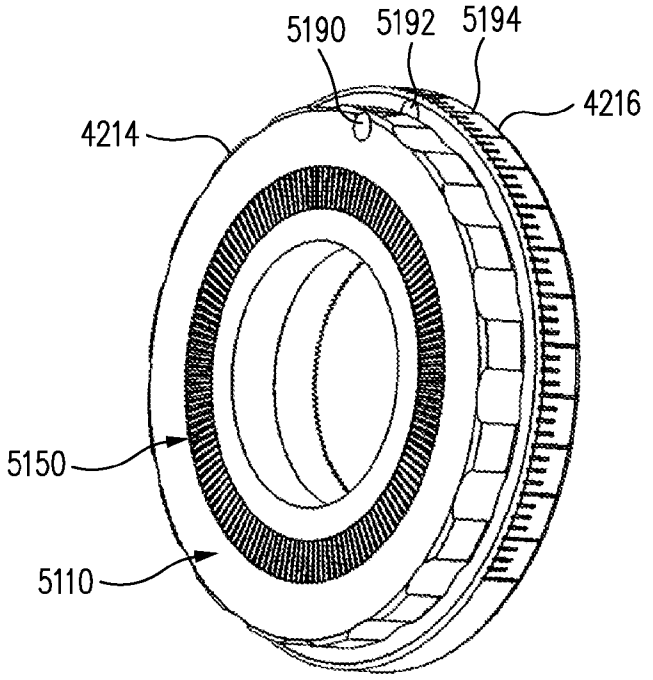

FIG. 51A

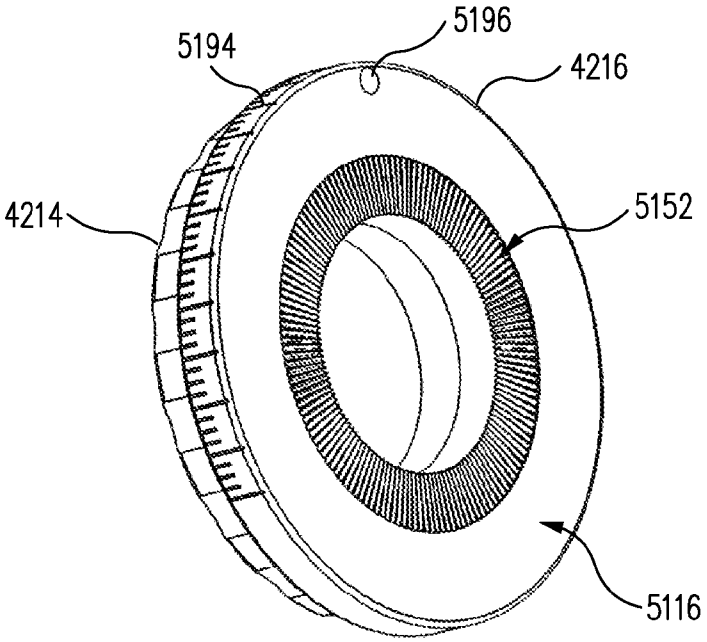

FIG. 51B

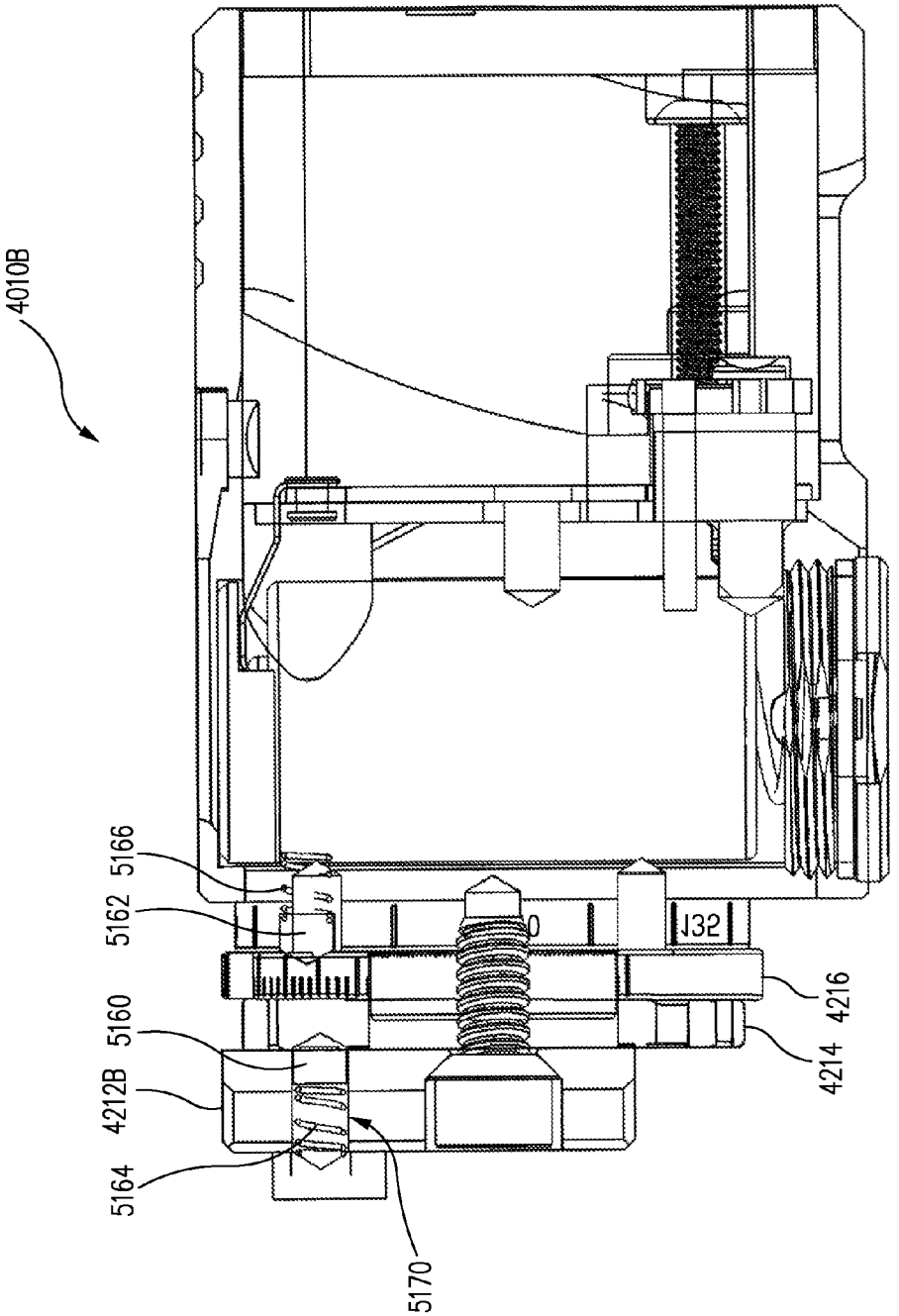

FIG. 51C

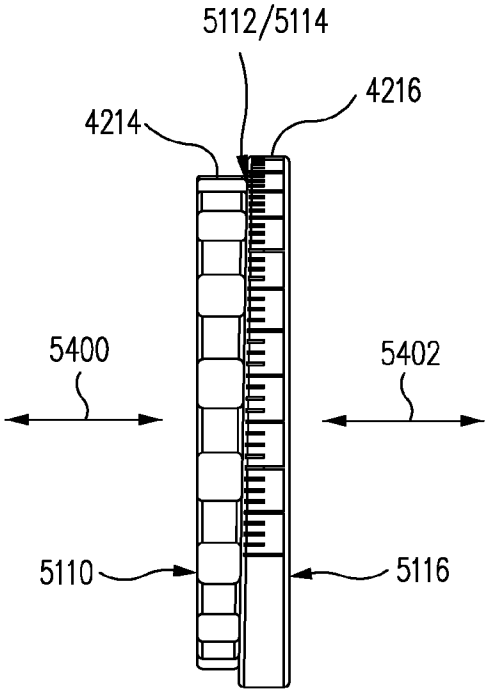

FIG. 51D

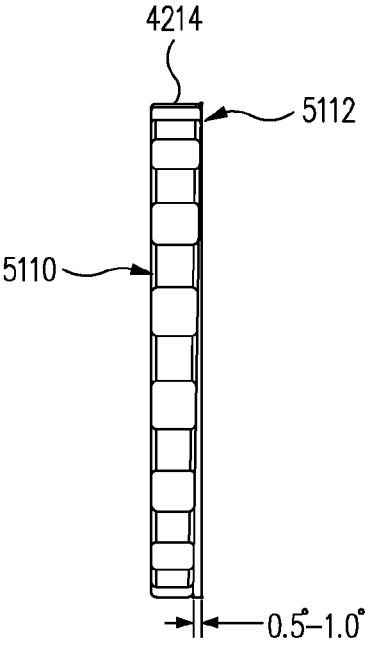

FIG. 52

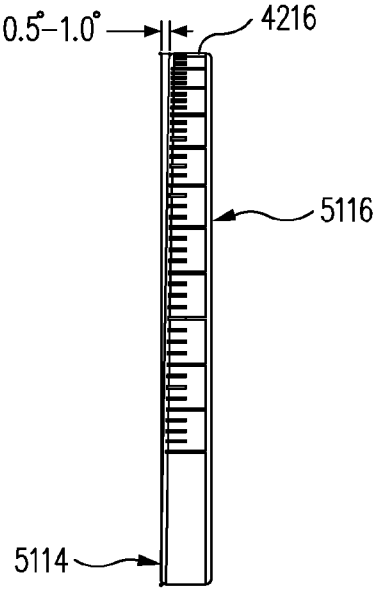

FIG. 53

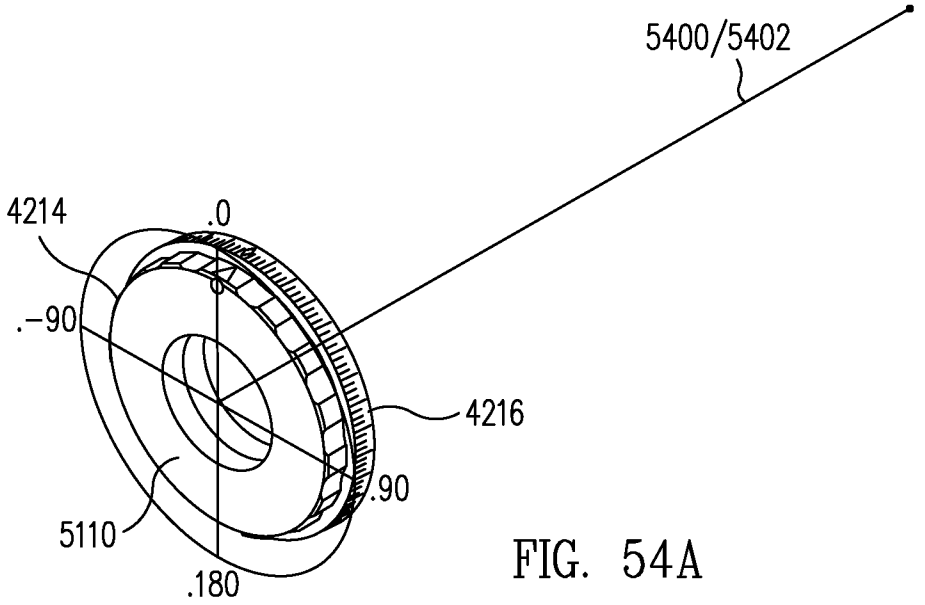

FIG. 54A

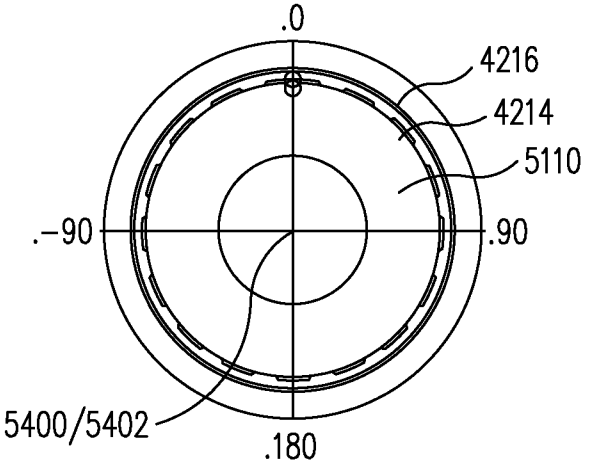

FIG. 54B

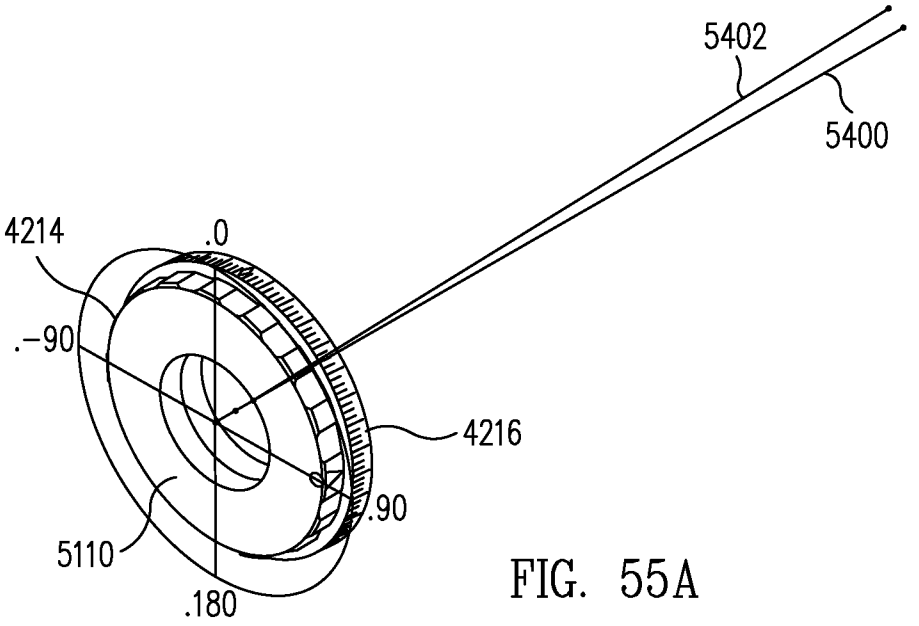

FIG. 55A

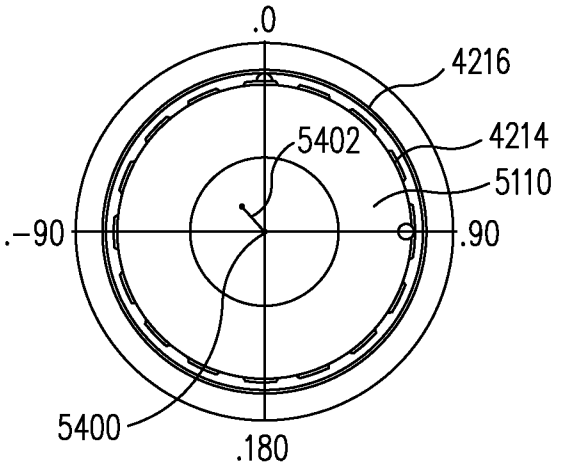

FIG. 55B

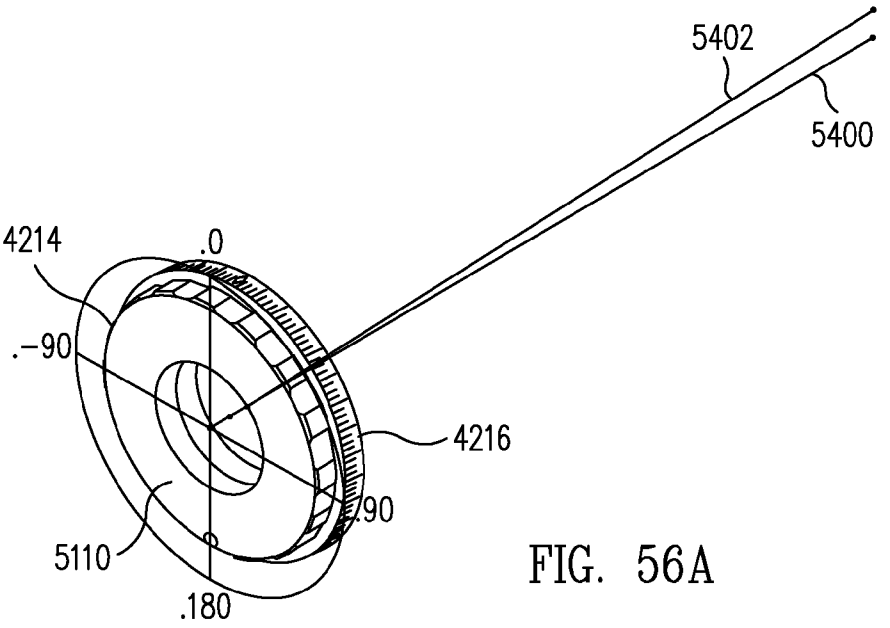

FIG. 56A

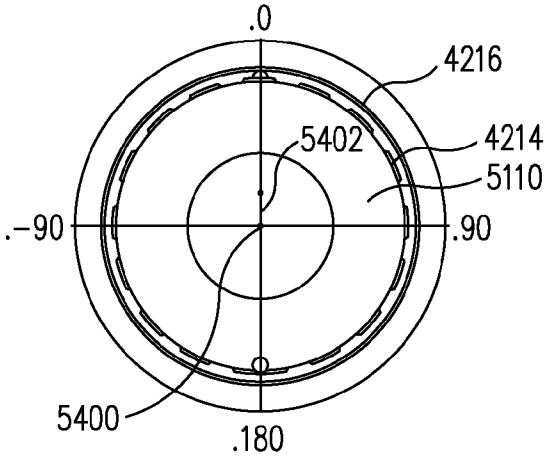

FIG. 56B

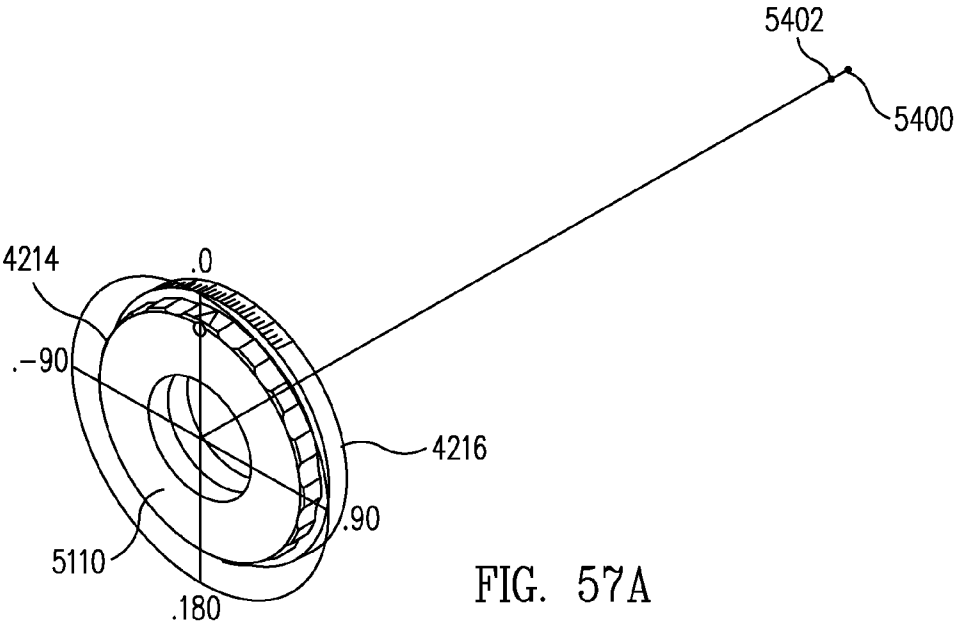

FIG. 57A

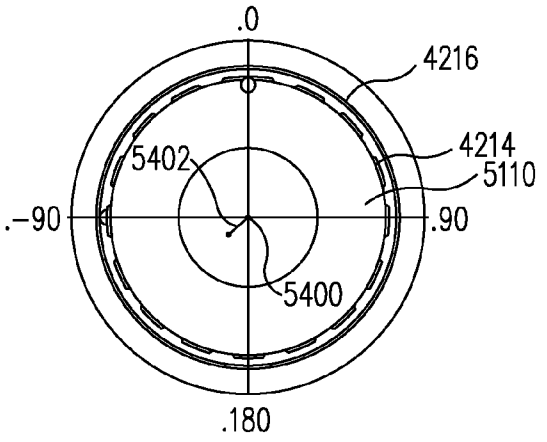

FIG. 57B

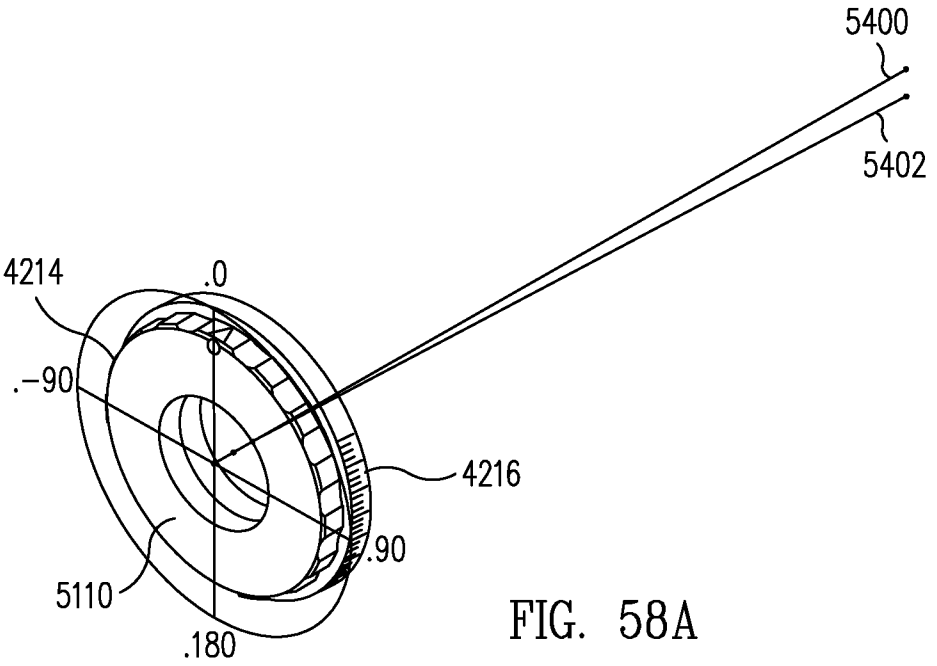

FIG. 58A

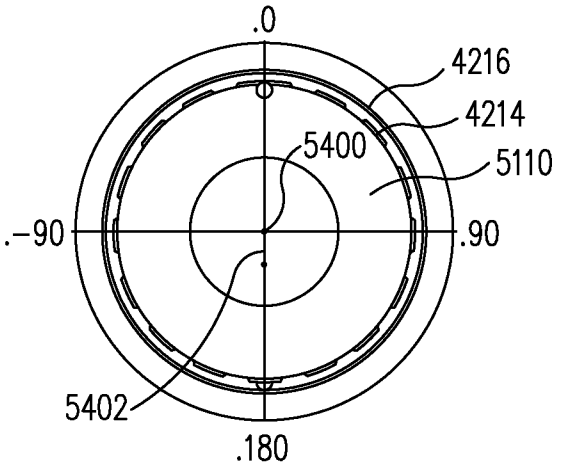

FIG. 58B

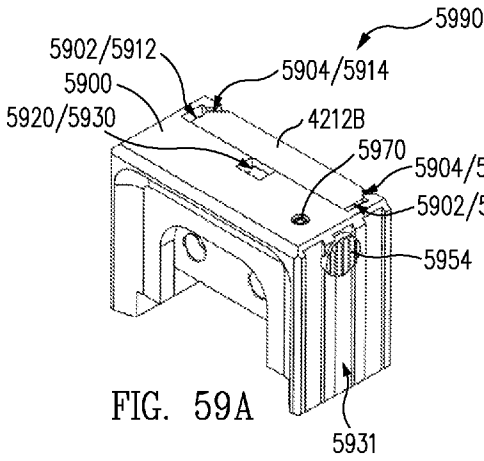

FIG. 59A

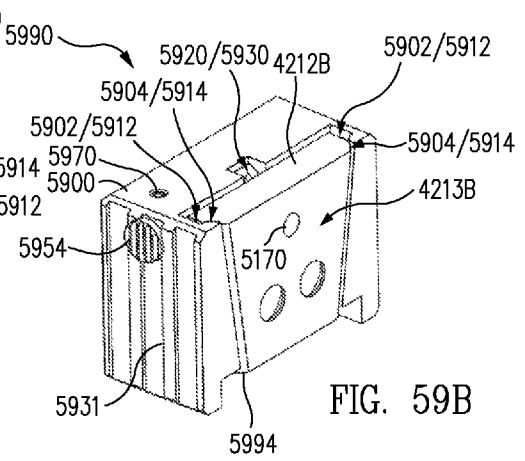

FIG. 59B

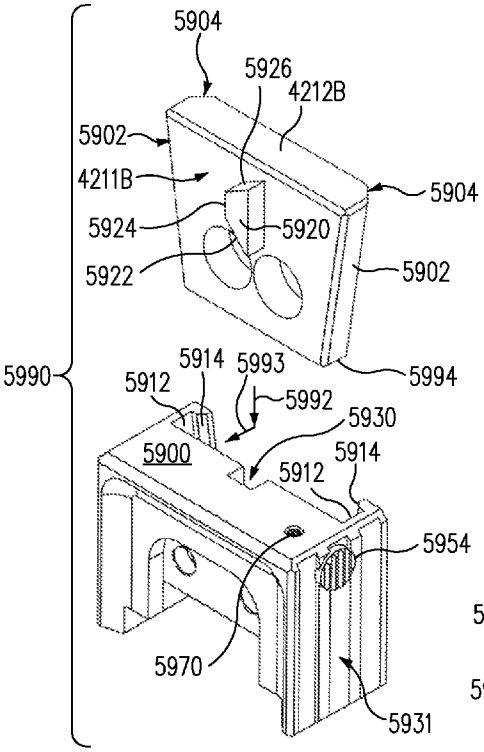

FIG. 60A

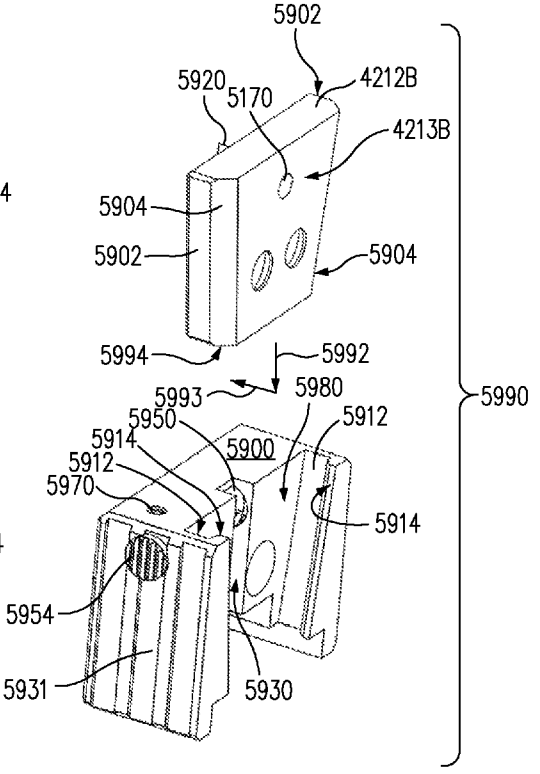

FIG. 60B

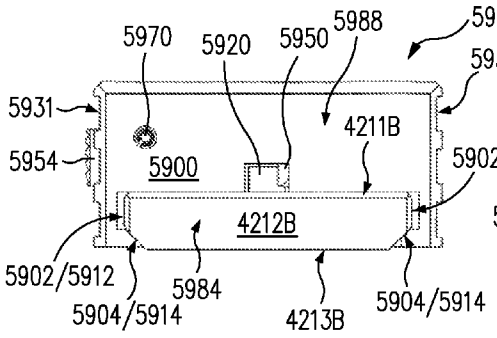

FIG. 61A

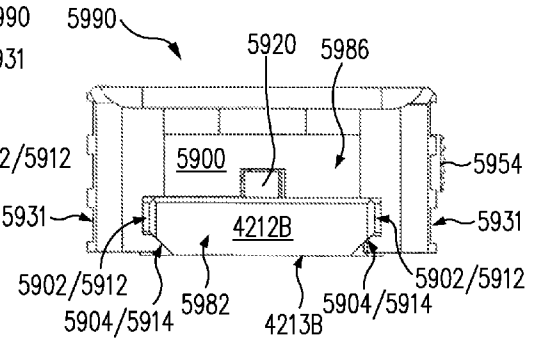

FIG. 61B

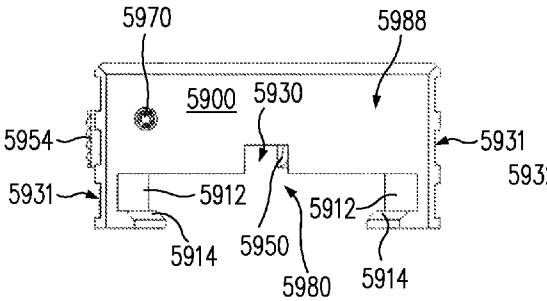

FIG. 62A

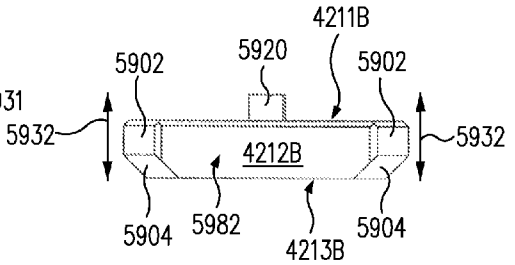

FIG. 63A

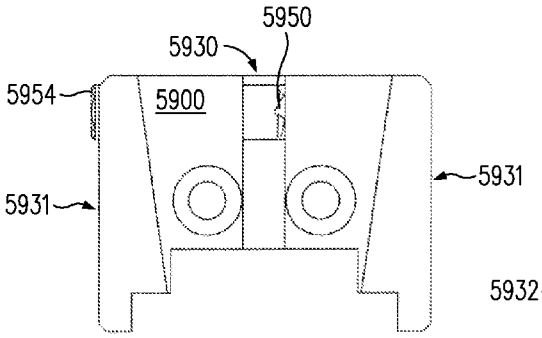

FIG. 62B

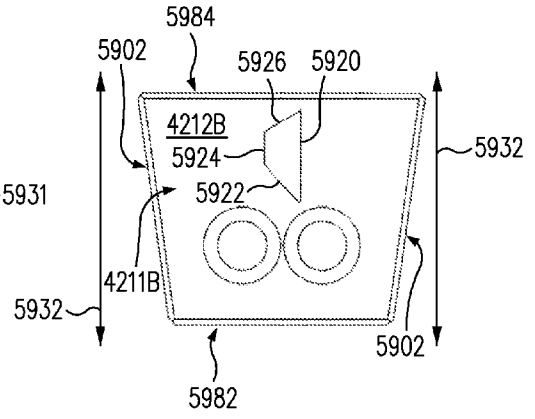

FIG. 63B

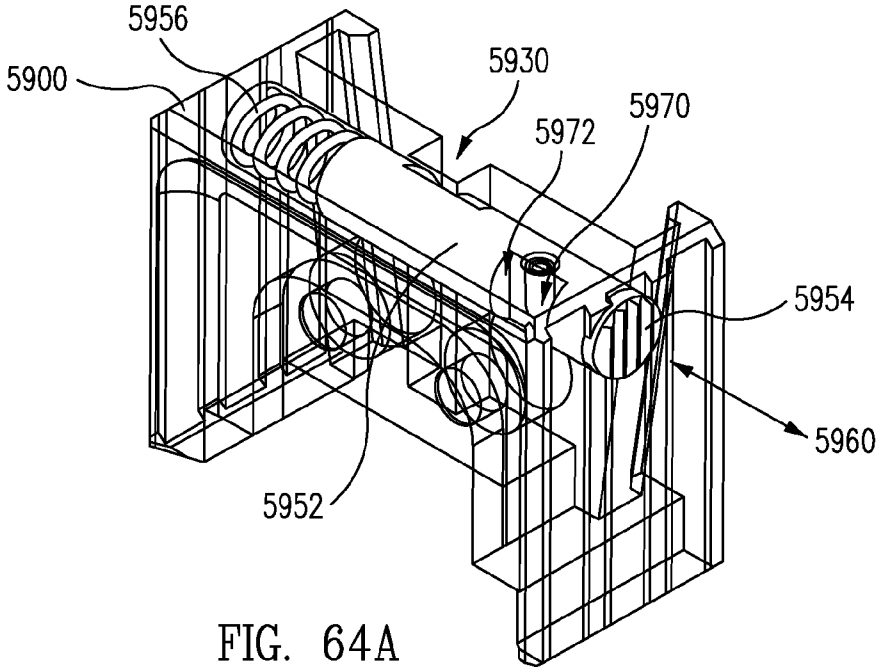

FIG. 64A

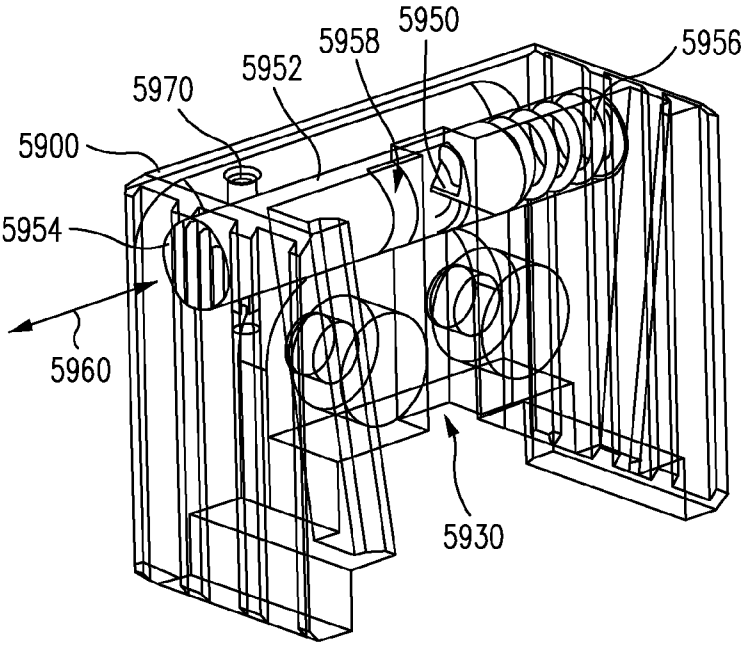

FIG. 64B

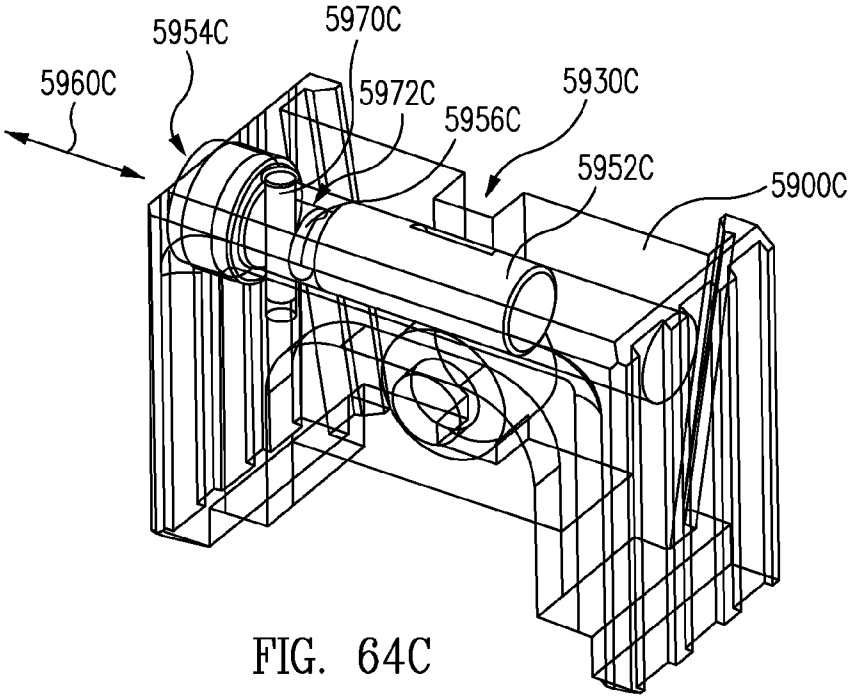

FIG. 64C

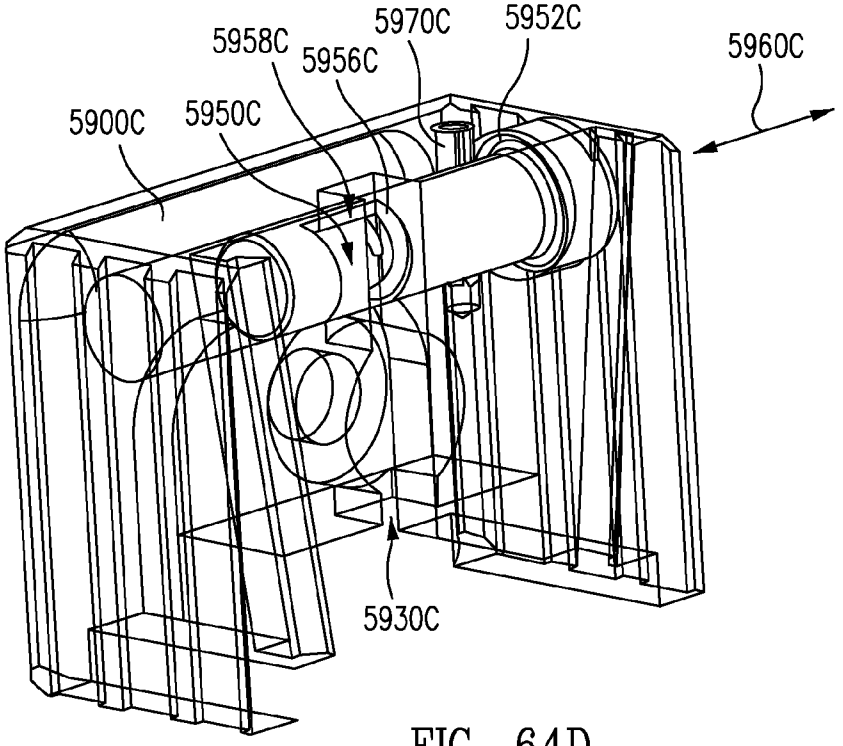

FIG. 64D

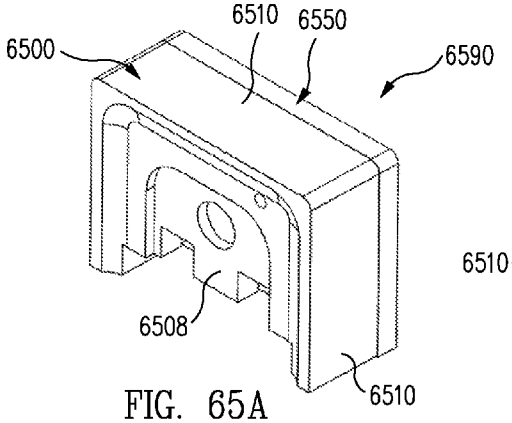

FIG. 65A

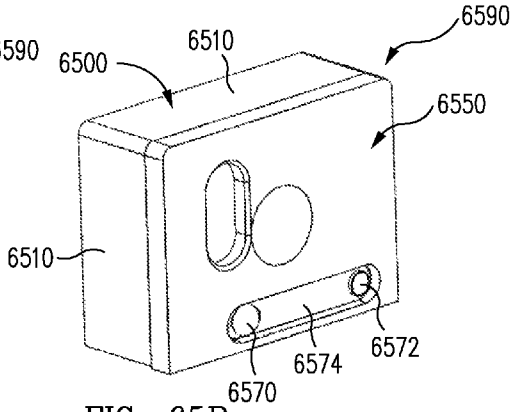

FIG. 65B

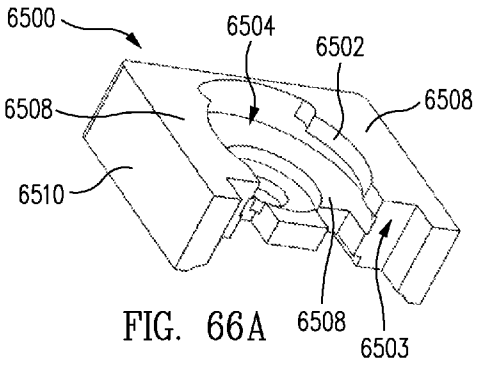

FIG. 66A

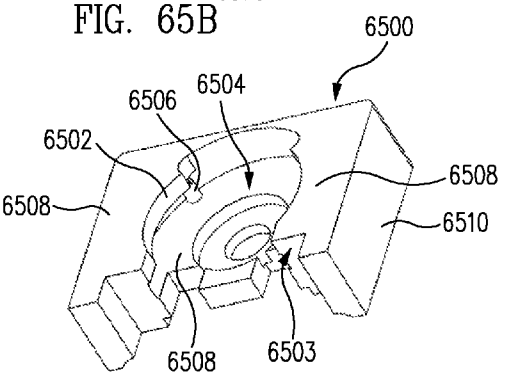

FIG. 66B

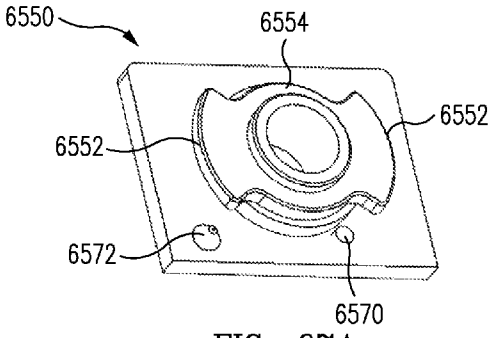

FIG. 67A

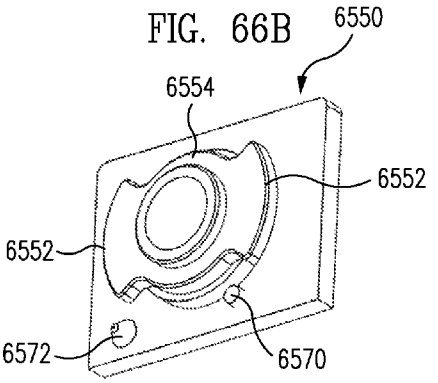

FIG. 67B

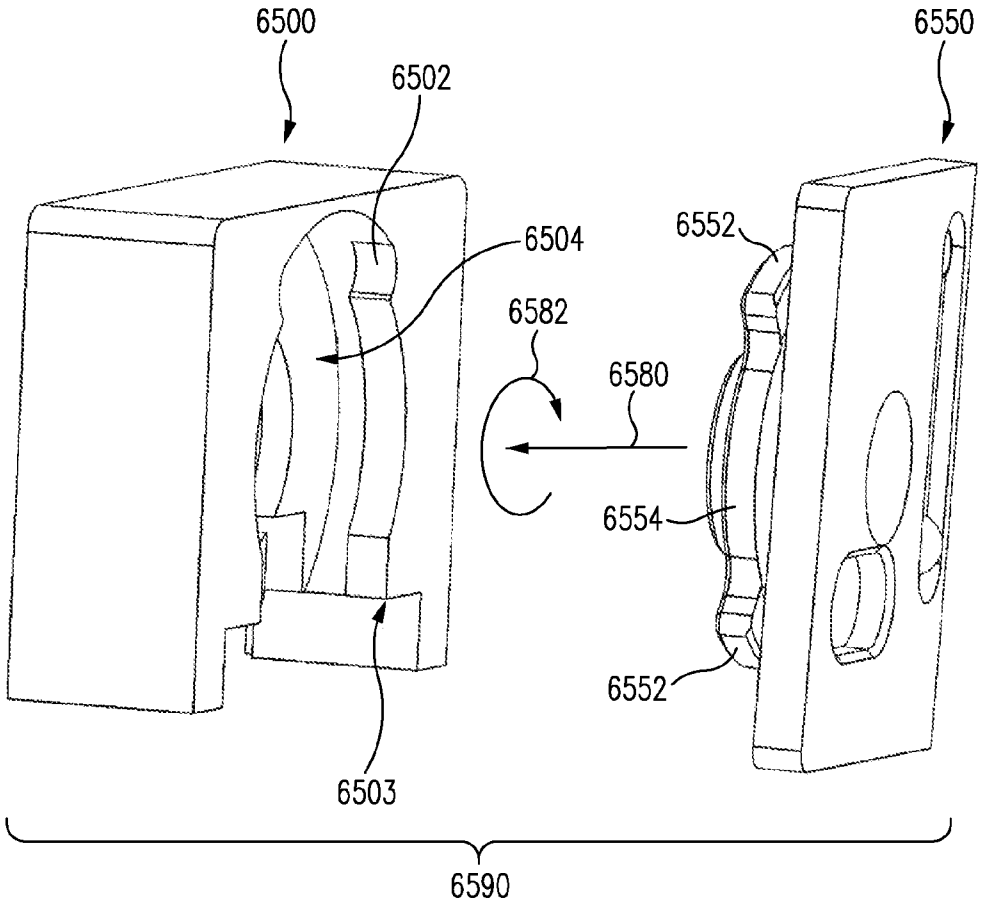

FIG. 68

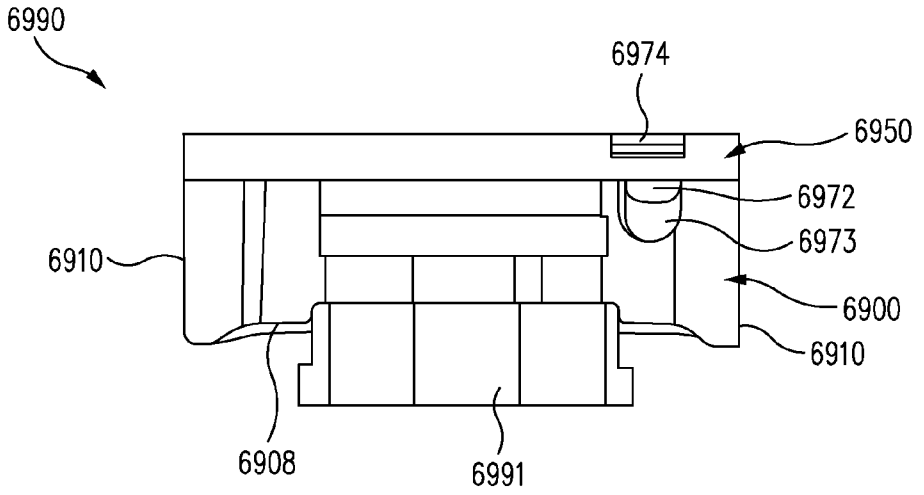

FIG. 69A

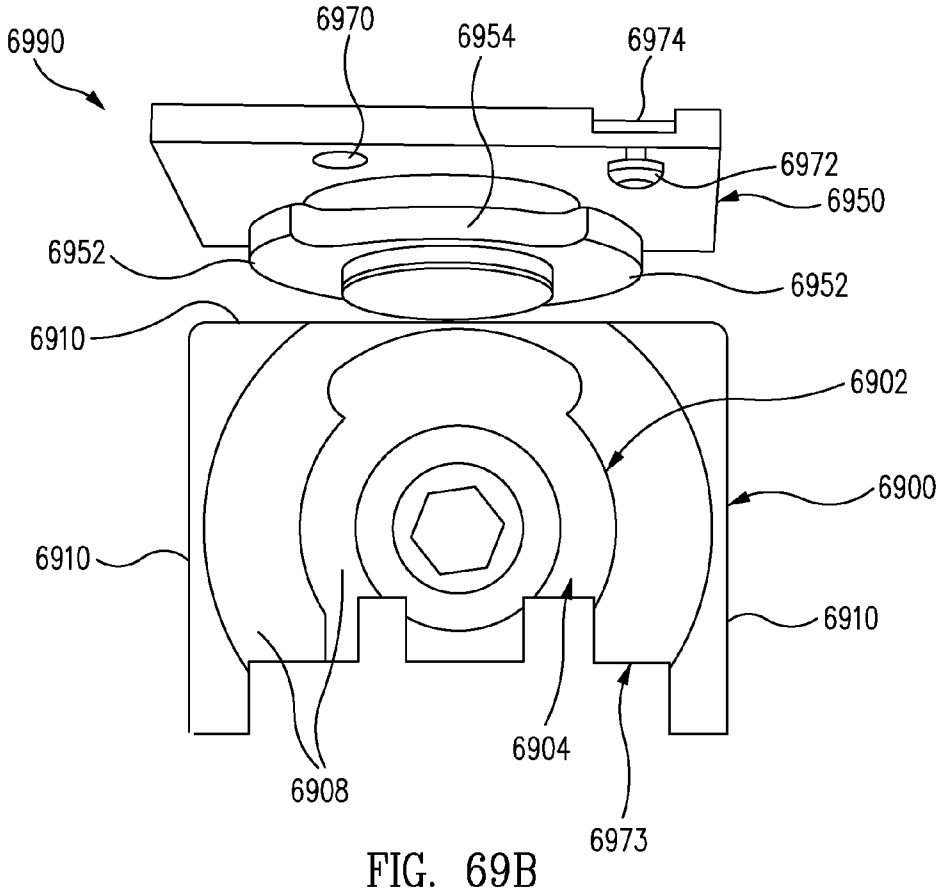

FIG. 69B

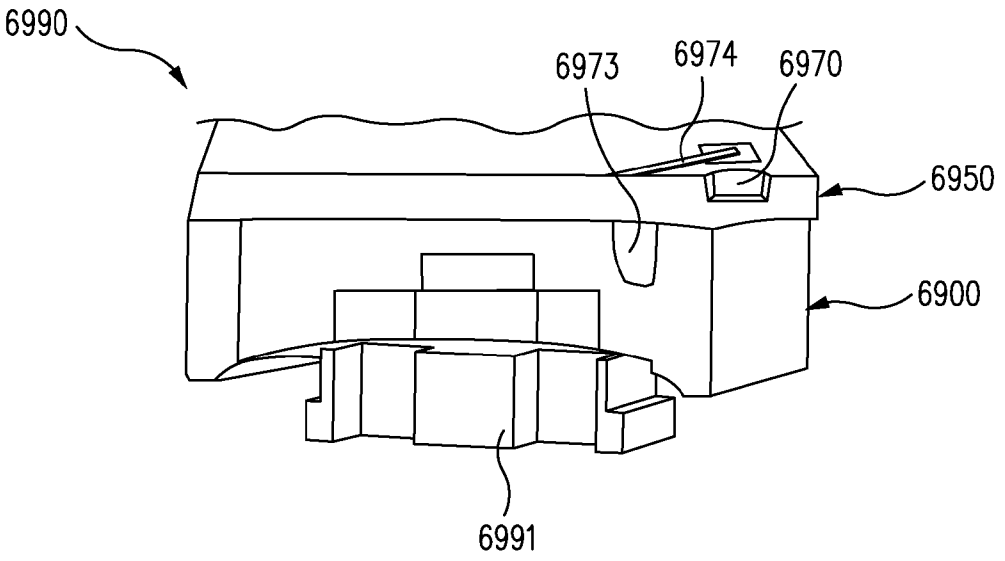

FIG. 69C

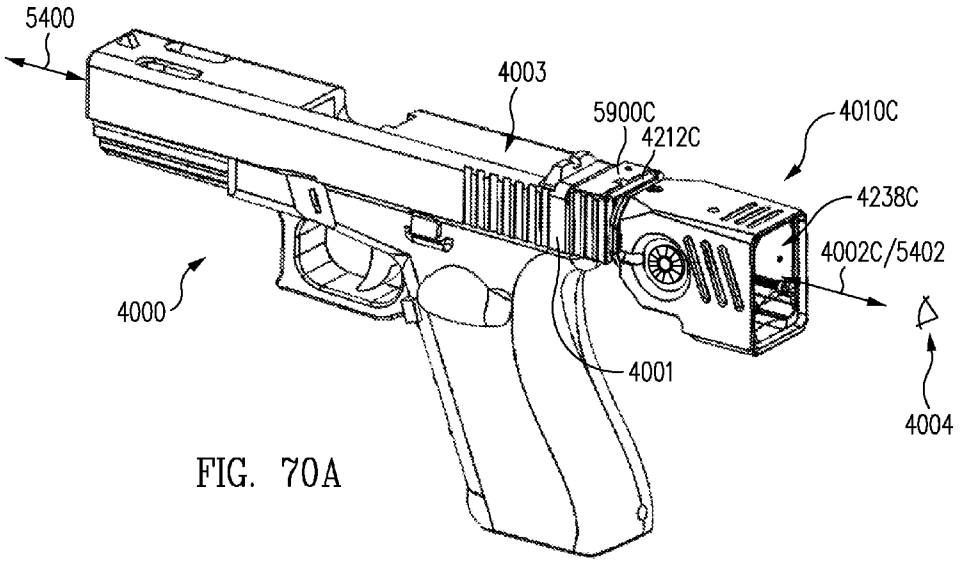

FIG. 70A

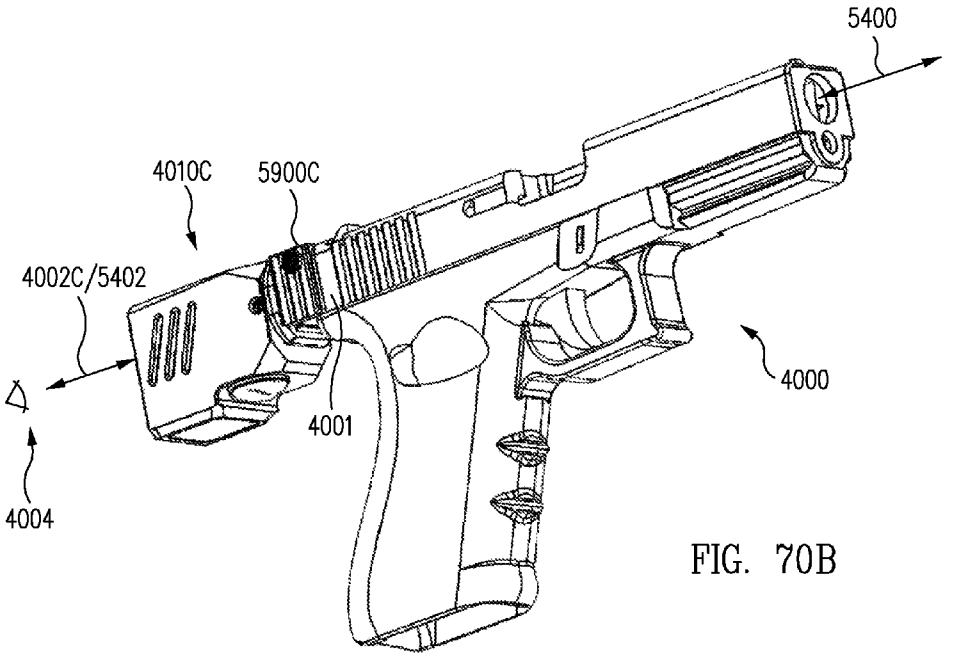

FIG. 70B

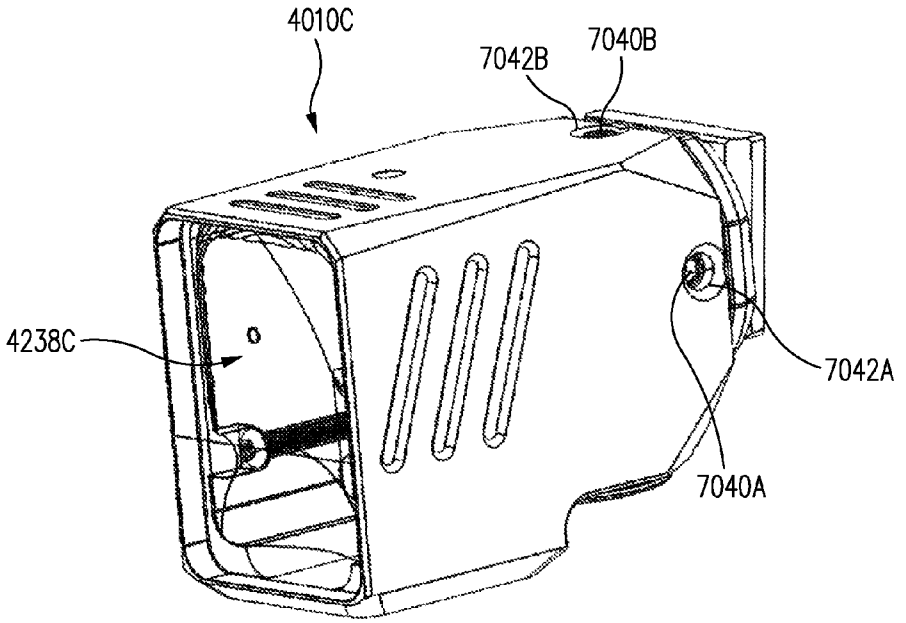

FIG. 71A

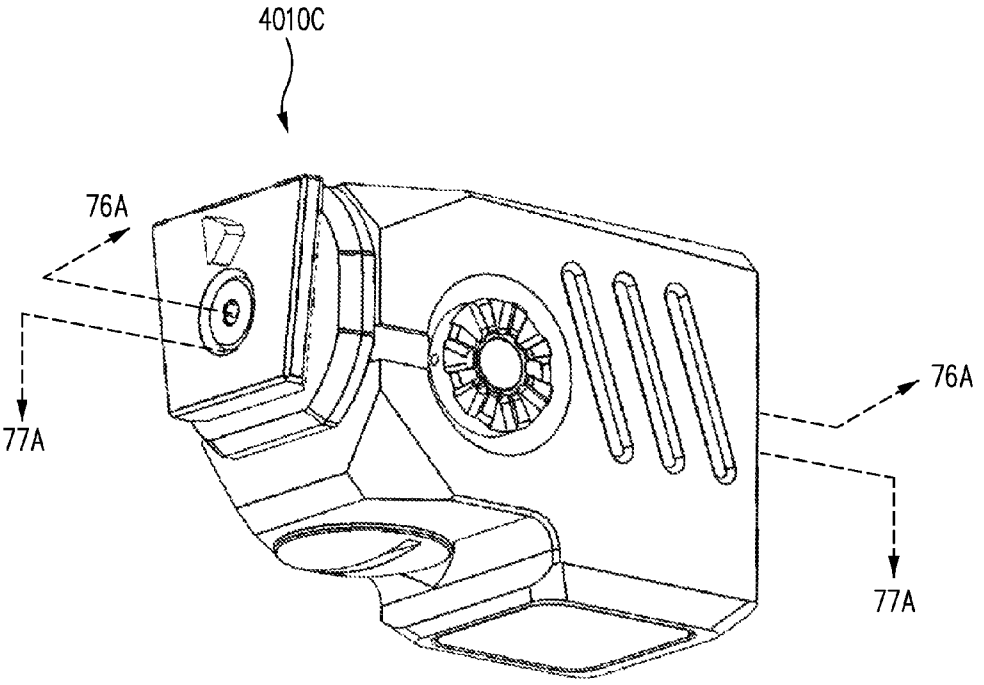

FIG. 71B

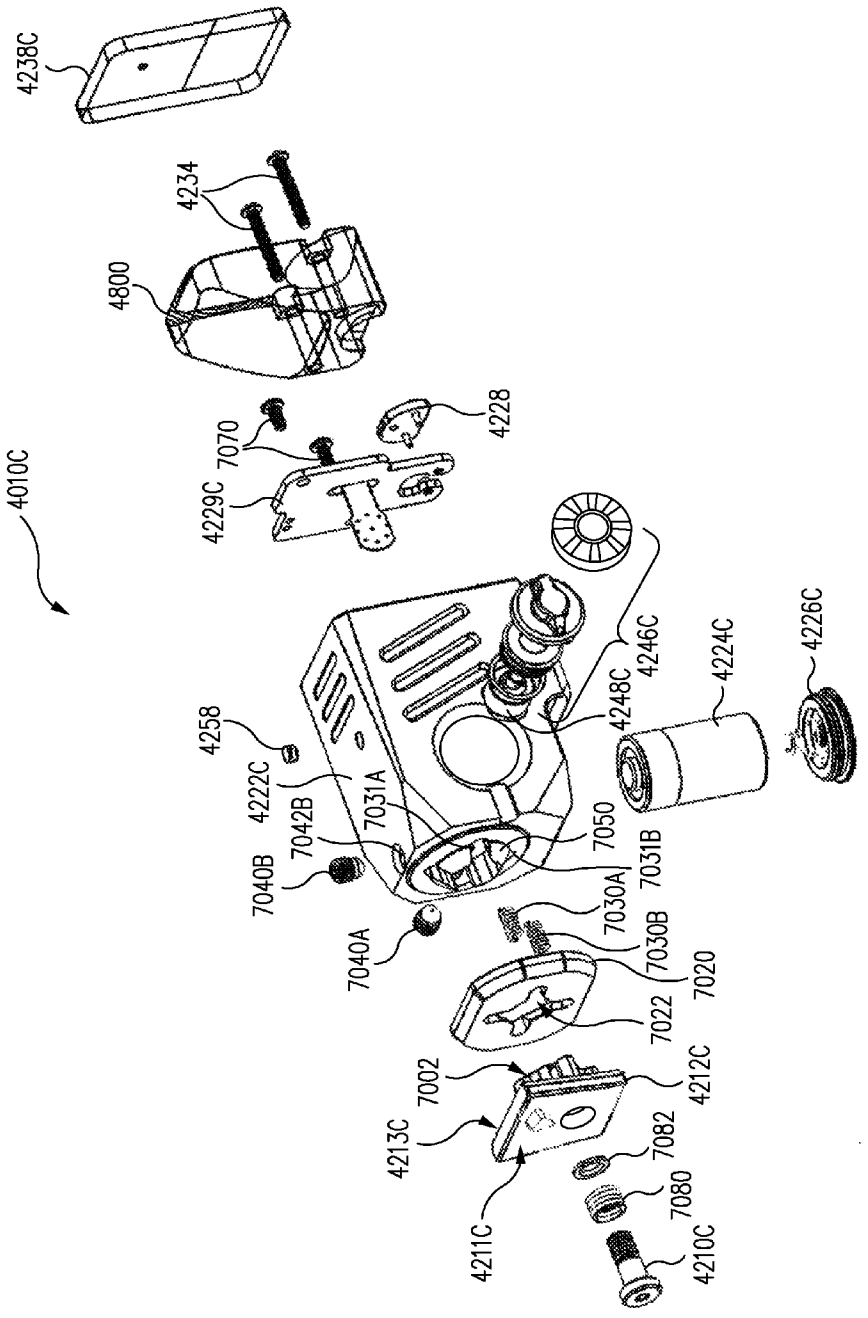
4238C
4234
4800
4228
7070
4229C
4010C
4246C
4248C
4224C
4226C
4258
4222C
7042B
7031A
7050
7031B
7040B
7030A
7040A
7030B
7020
7022
7002
4212C
4213C
7082
7080
4211C
4210C

FIG. 72A

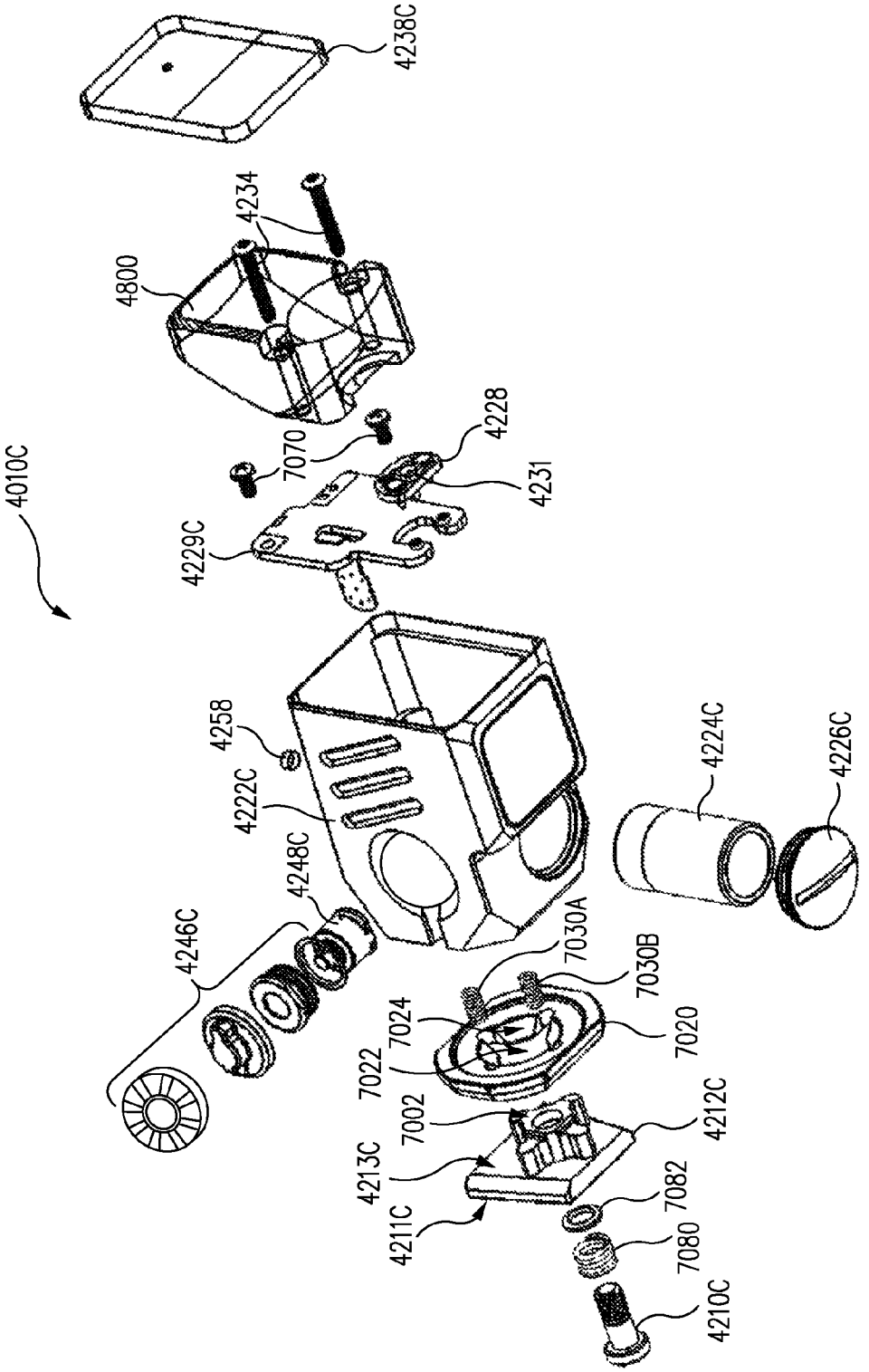
4238C
4234
4800
4010C
7070
4228
4231
4229C
4258
4222C
4248C
4246C
4224C
4226C
7030A
7030B
7024
7022
7020
7002
4212C
4213C
4211C
7082
7080
4210C

FIG. 72B

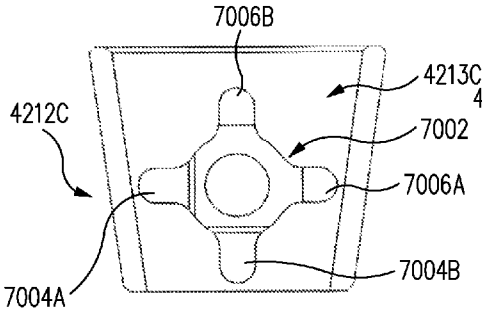

FIG. 73A

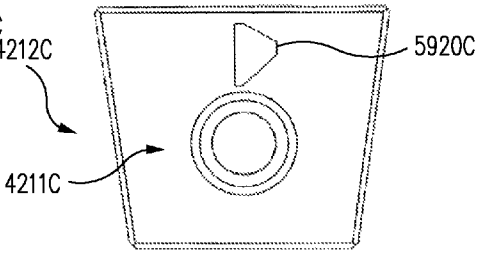

FIG. 73B

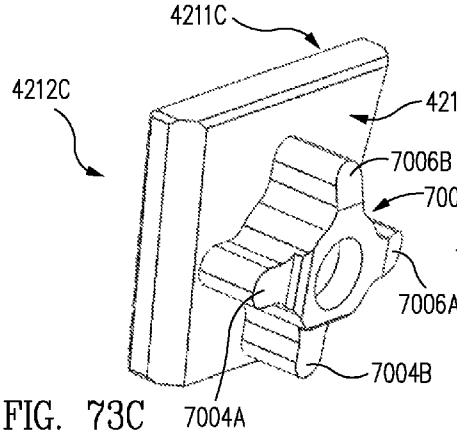

FIG. 73C

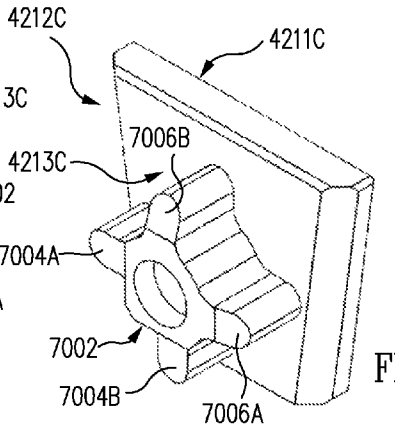

FIG. 73D

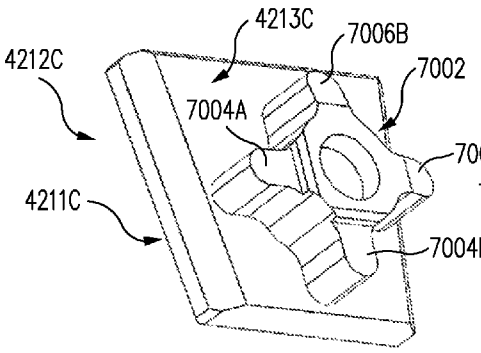

FIG. 73E

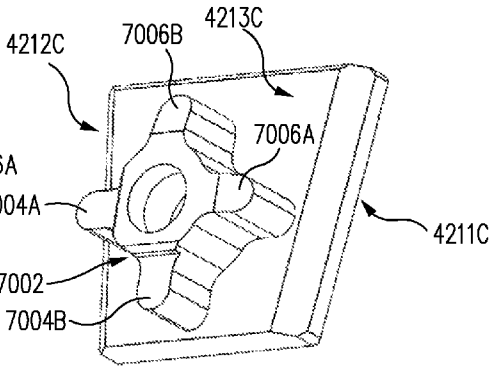

FIG. 73F

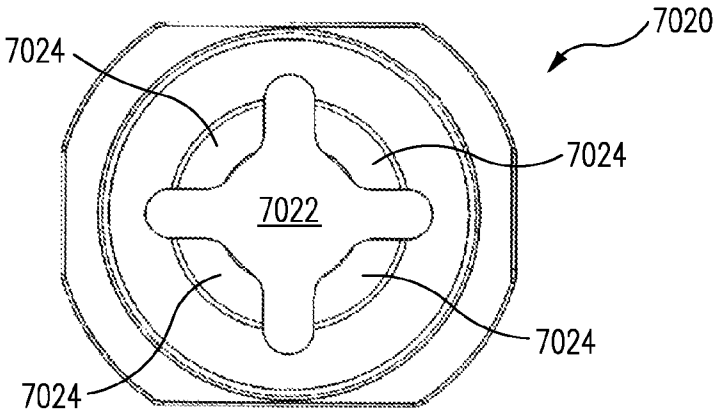

FIG. 74A

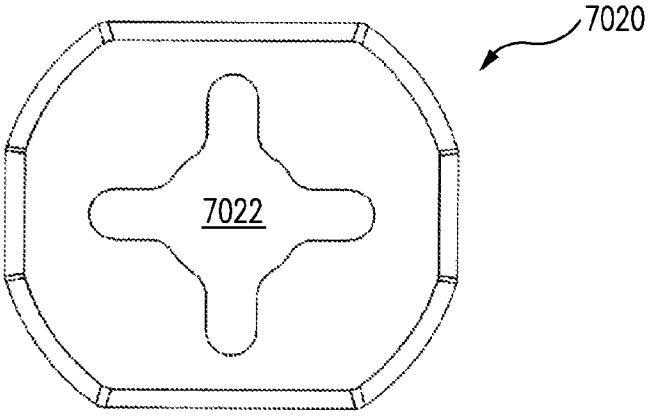

FIG. 74B

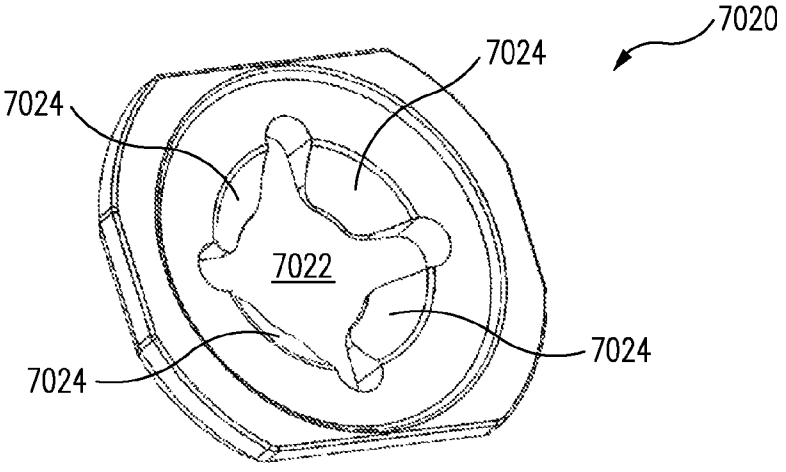

FIG. 74C

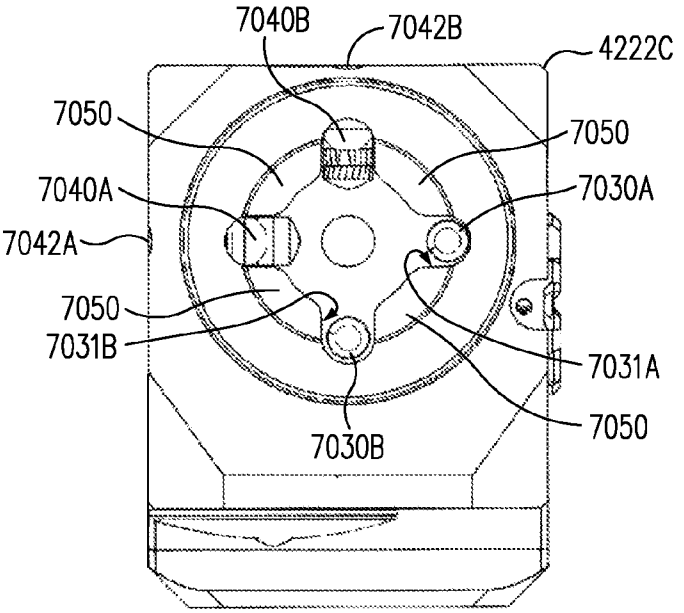

FIG. 75A

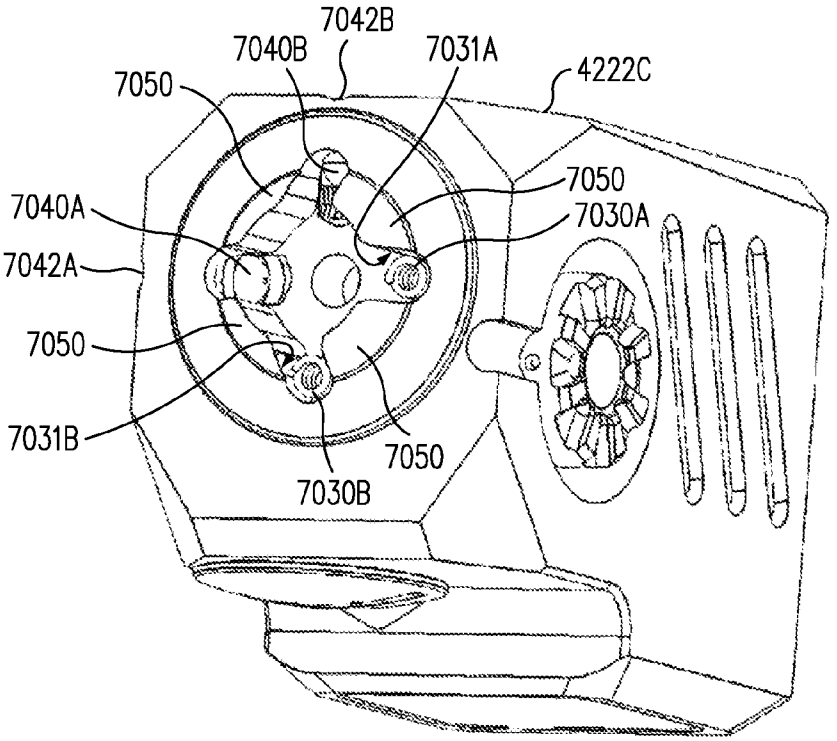

FIG. 75B

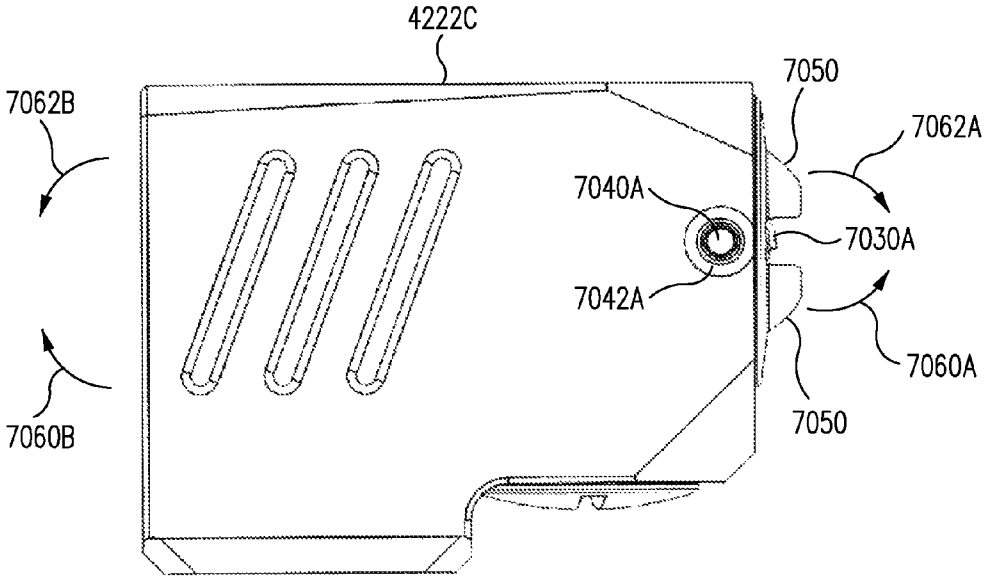

FIG. 75C

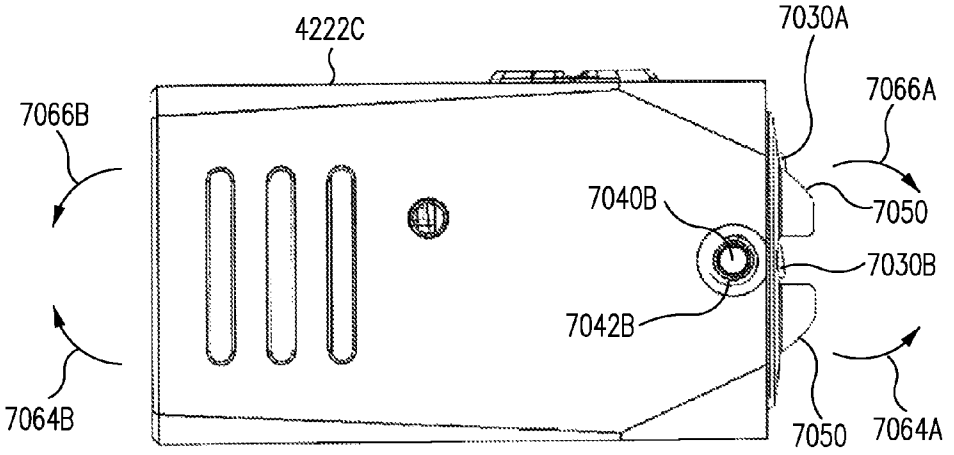

FIG. 75D

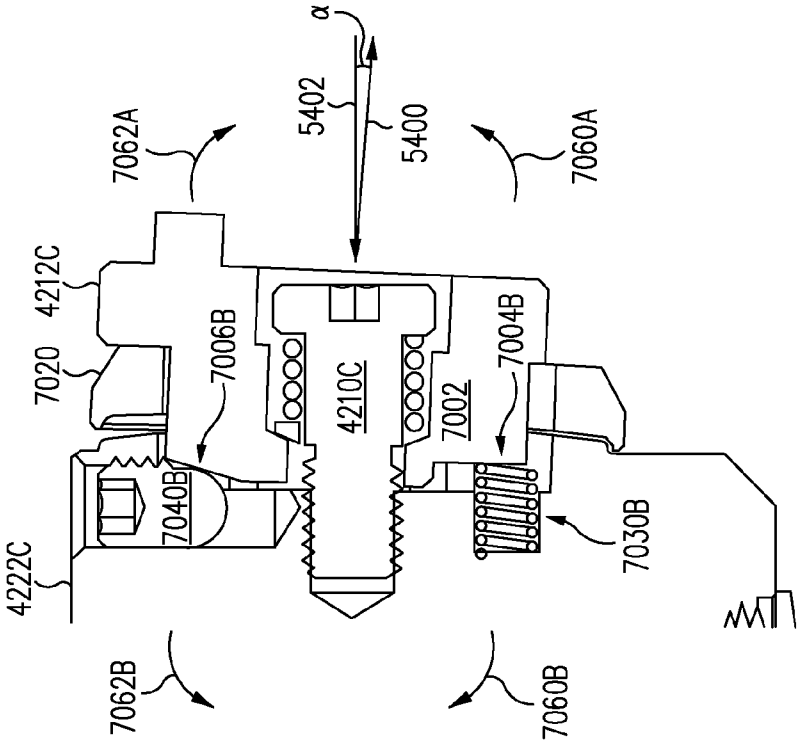

FIG. 76B

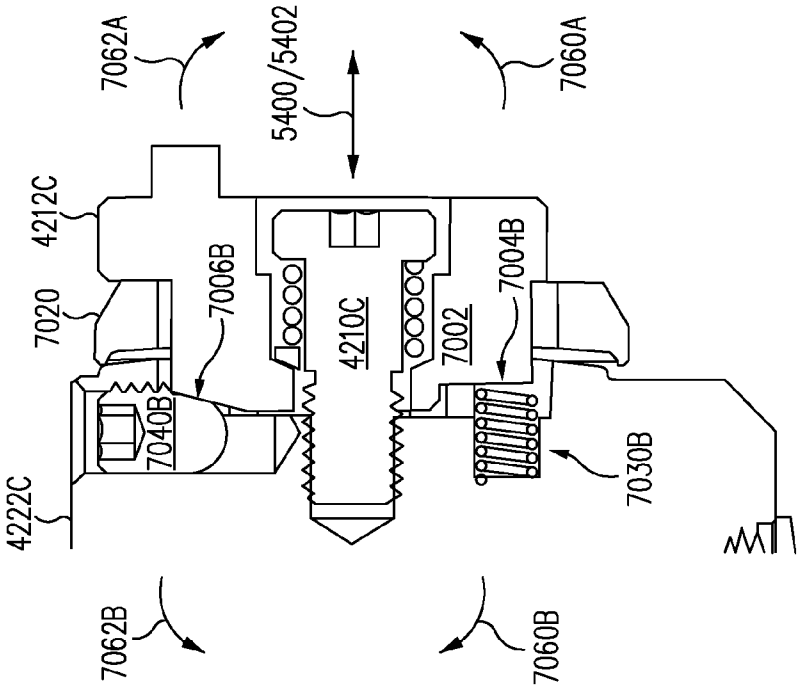

FIG. 76A

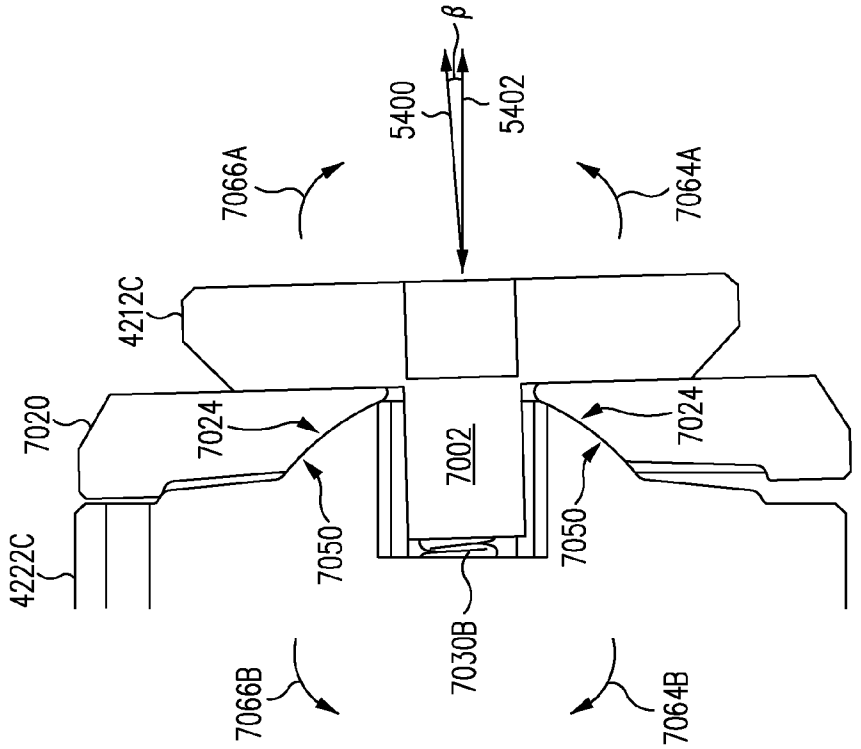

FIG. 77B

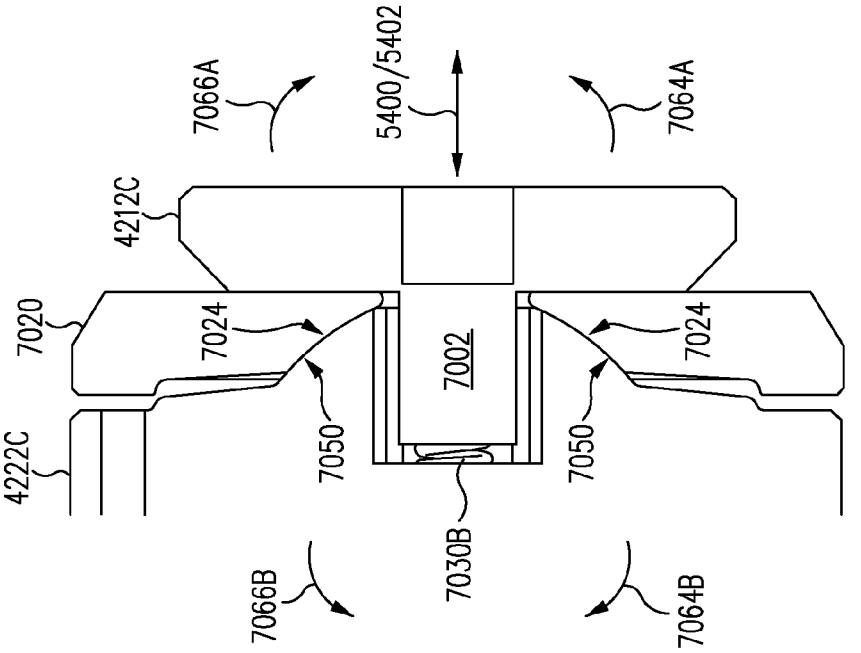

FIG. 77A

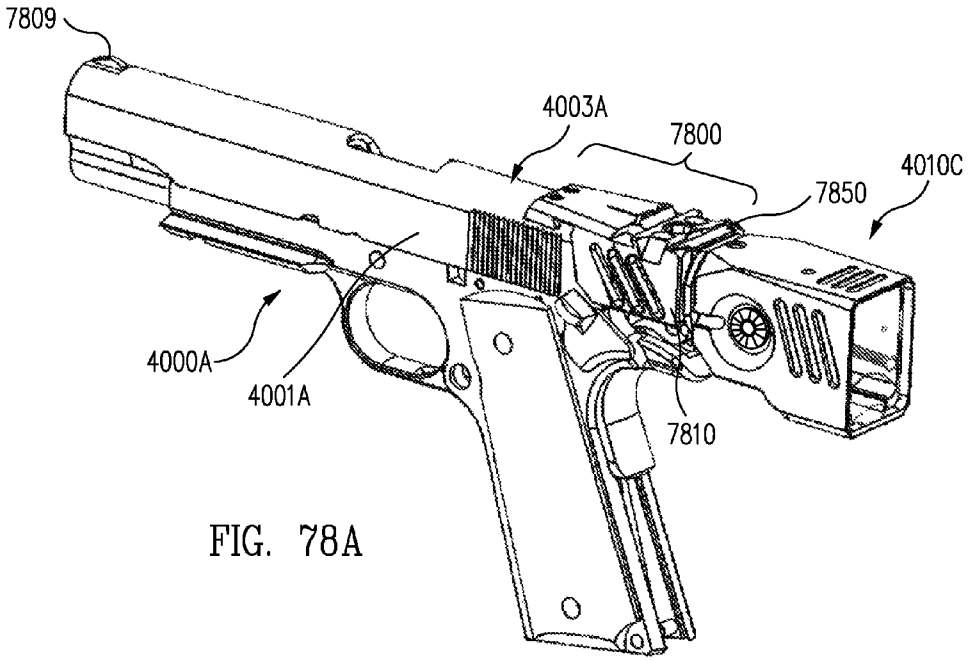

FIG. 78A

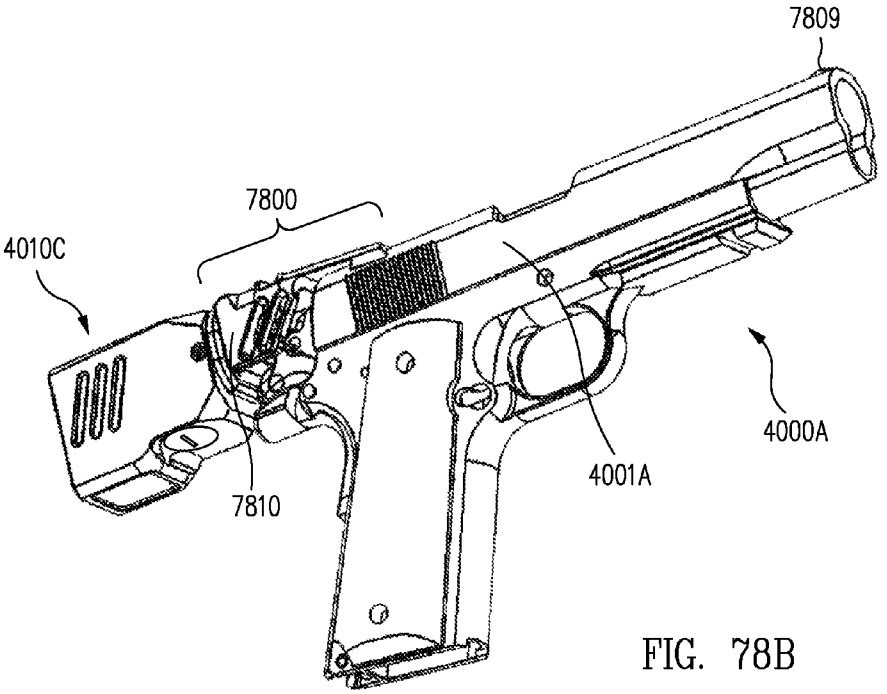

FIG. 78B

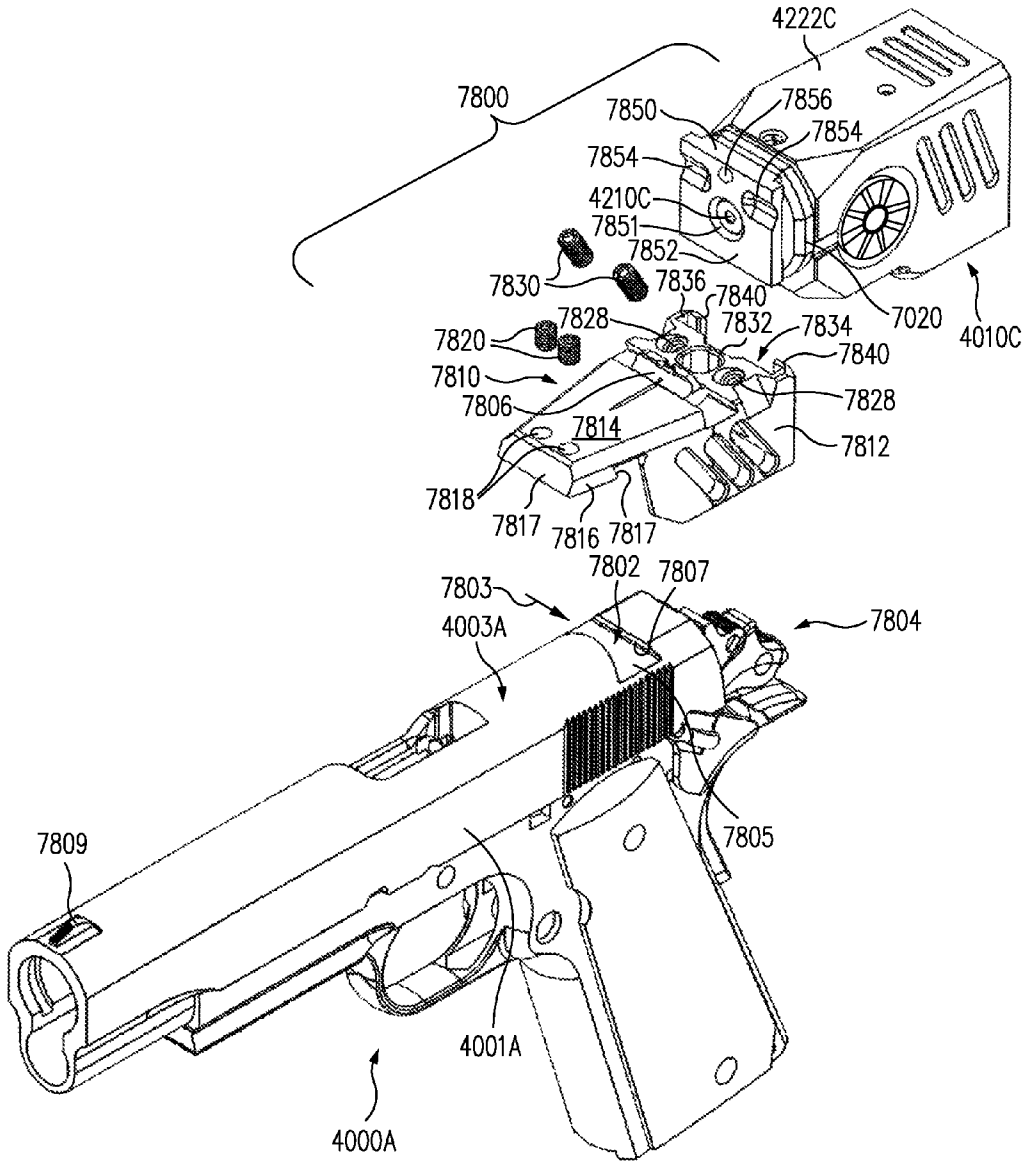
4222C
7800
7850
7856
7854
7854
4210C
7851
7852
7830
7836
7840
7828
7832
7834
7020
4010C
7820
7840
7810
7828
7806
7814
7812
7818
7817
7816
7817
7802
7807
7803
7804
4003A
7805
7809
4001A
4000A

FIG. 79

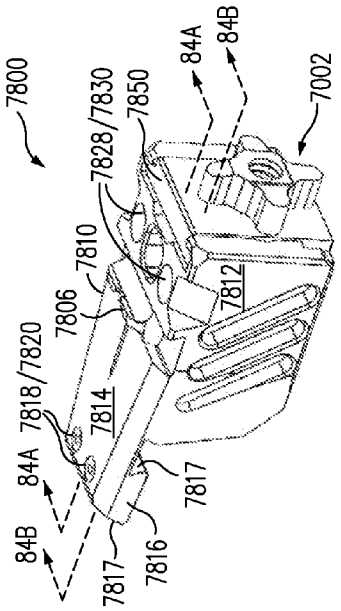

FIG. 80B

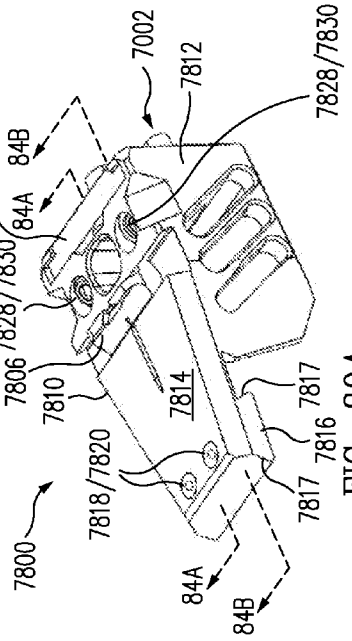

FIG. 80A

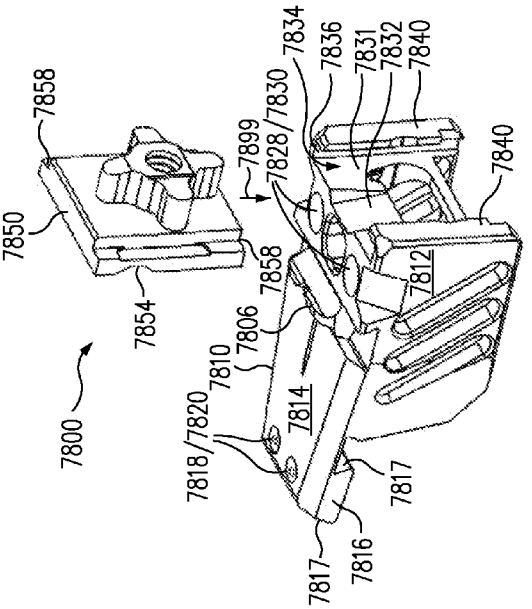

FIG. 81B

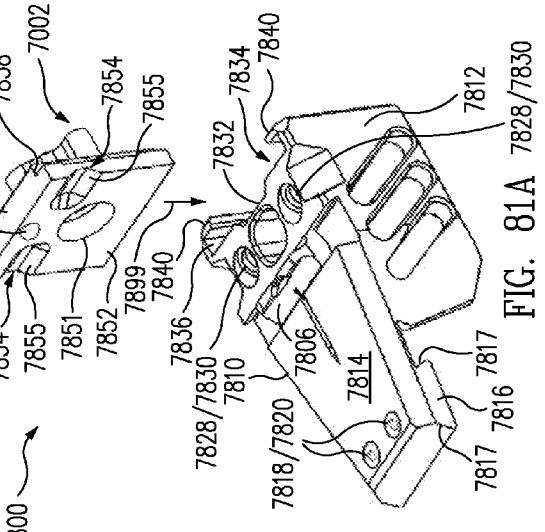

FIG. 81A

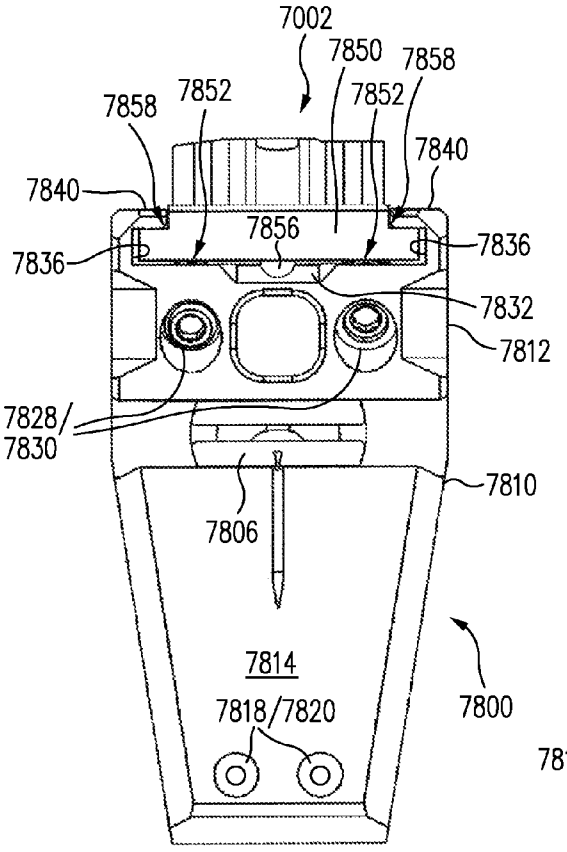

FIG. 82A

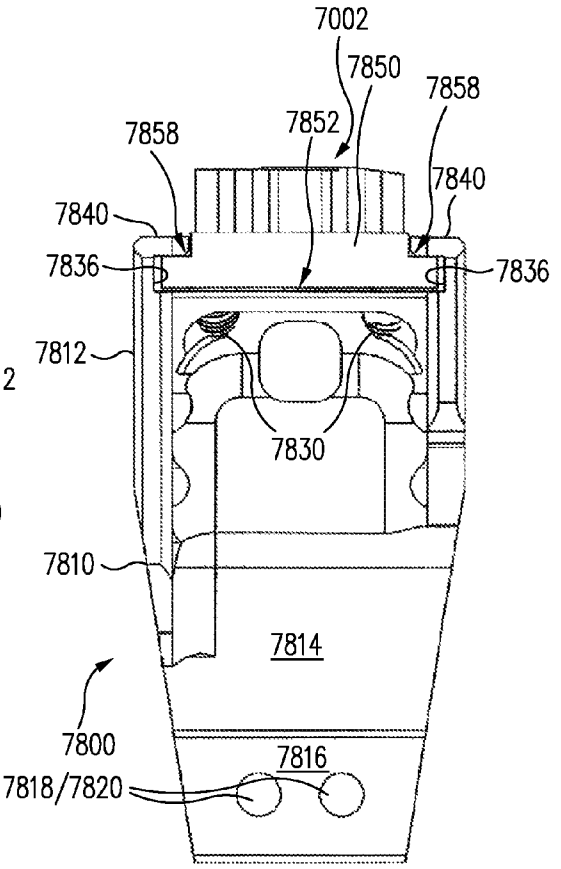

FIG. 82B

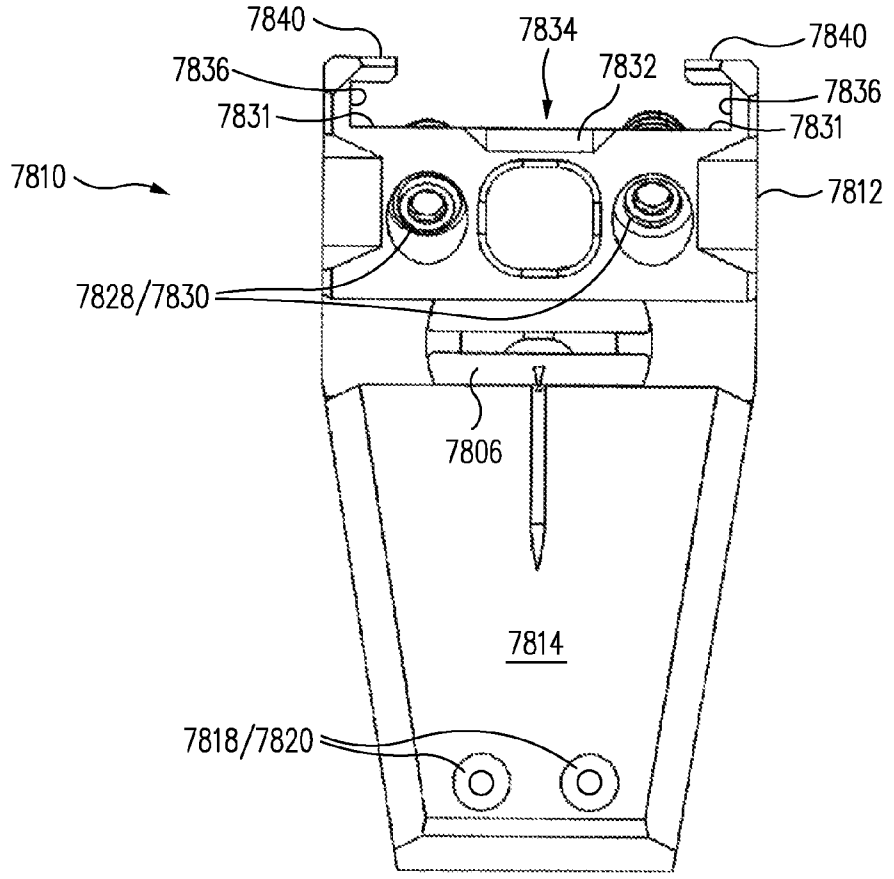

FIG. 83A

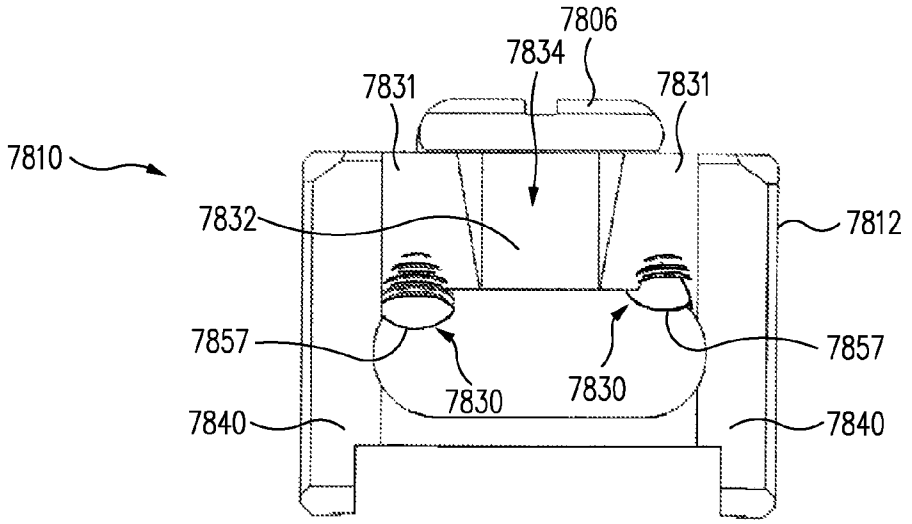

FIG. 83B

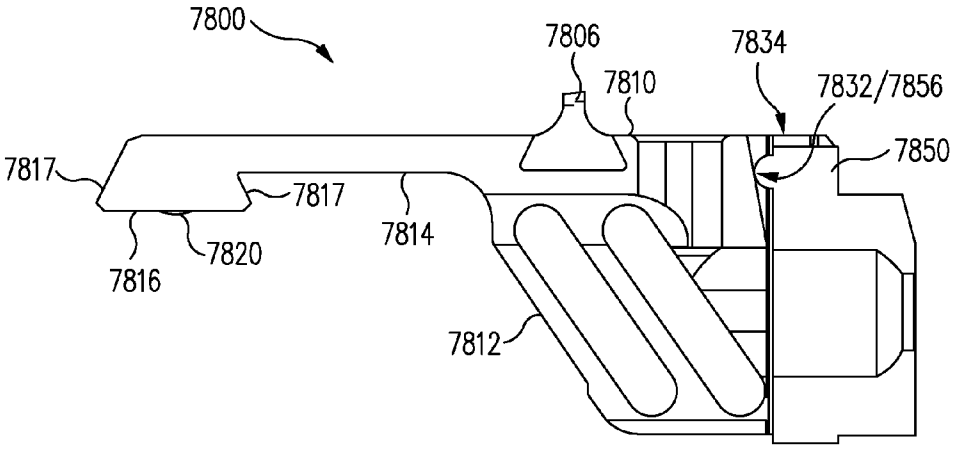

FIG. 84A

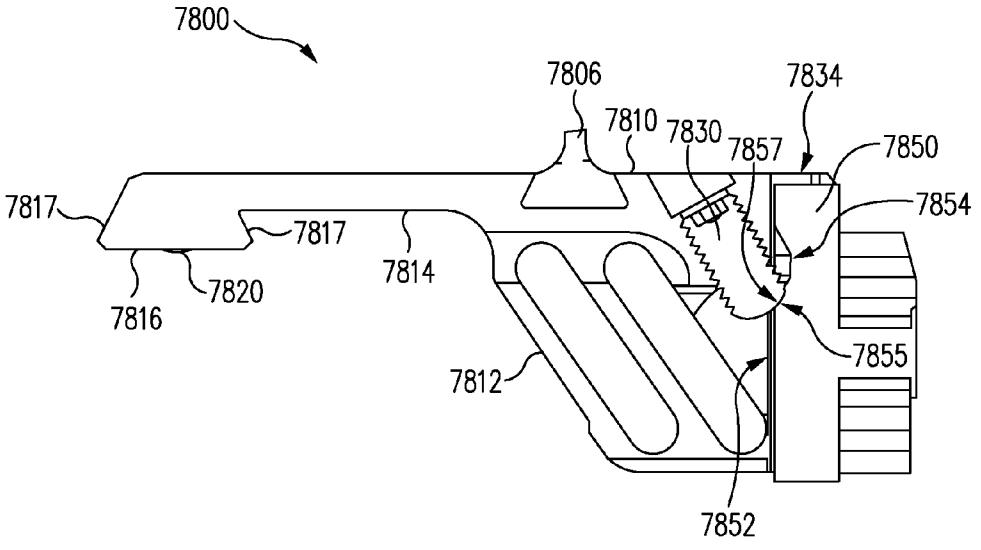

FIG. 84B

GUN SIGHT

CROSS-REFERENCE TO RELATED APPLICATIONS

This application claims the benefit of U.S. Provisional Patent Application No. 61/751,597 filed Jan. 11, 2013 and entitled "GUN SIGHT", which is hereby incorporated by reference in its entirety.

This application is a continuation-in-part application of U.S. patent application Ser. No. 13/359,925 filed Jan. 27, 2012 and entitled "GUN SIGHT", which is a continuation application of U.S. patent application Ser. No. 12/785,781 filed May 24, 2010 and entitled "GUN SIGHT", all of which are hereby incorporated by reference in their entirety.

BACKGROUND

1. Field of the Invention

The present invention relates to weapon sighting devices in general, and more particularly to sights for use on firearms.

2. Related Art

Over the years, sighting devices have been developed to permit the user of small arms such as rifles, muskets, revolvers, shotguns, machine guns, and pistols, to align the weapon accurately relative to a target such that a projectile fired from the weapon may hit the target reliably.

Such sighting devices, or gun sights, may be seen as falling into two broad groups, namely, "active" and "passive" sights. Active sights typically illuminate the target with some form of radiation, and rely on a reflection of the radiation from the target to ensure correct alignment of the weapon with the target. An example of an active sight is commonly referred to as a laser sight. A laser sight generates a beam of laser light that is projected onto the target field such that the light beam actually illuminates the point of impact at a certain range. Such sights are highly effective in certain conditions, but suffer from a number of disadvantages. For example, depending on conditions the target may be able to see the light beam or its reflection, and when there are multiple weapons illuminating the same target it may become difficult for each user to know which reflection is associated with which firearm.

Passive sights typically rely on ambient illumination of the target and include the familiar open sights or "iron sights" comprising a front sight (e.g., a dispart sight such as a blade or tang disposed at the front end of the barrel of the weapon) and a rear sight (e.g., a complementary notch, groove, or circular aperture disposed at the rear end of the receiver or slide of the weapon). Passive sights also include "telescopic" sights that use a reticle, such as a set of adjustable "crosshairs" disposed inside the optics of a magnifying or non-magnifying telescope.

One type of passive sight, commonly referred to as a reflex sight, uses a refractive or reflective optical system to generate a collimated beam of light that is projected toward the user to create an illuminated reticle. The resulting plane wave seen by the user appears as a small, approximately circular disc of light that is focused at infinity. In a standard open reflex sight this illuminated reticle is projected such that it is superimposed over the field of view observed through the sight. This allows the user to see the target field through the sight as well as the illuminated reticle (e.g. an illuminated red dot) in one eye simultaneously. This gives the user a theoretically parallax-free image of the reticle, superimposed over the field of view through the sight.

Another type of passive gun sight that is particularly advantageous in close combat and similar situations is often

referred to as an "occluded eye gun sight" (OEG). A common form of an OEG is essentially a closed reflex sight, in which the field of view through the sight is occluded such that the user sees the illuminated dot of the reflex sight superimposed over a blank background instead of an open field of view through the sight. When using such an OEG, the user's dominant eye is positioned behind the OEG and focused on the illuminated dot. That dominant eye is blocked or occluded by the OEG such that it does not see the target and instead sees only the illuminated dot.

The user's other eye is not obscured by the OEG and is focused on the target. When aiming the firearm, the user's brain superimposes the illuminated dot seen by the occluded dominant eye onto the target seen with by the user's other eye such that if the firearm is properly oriented the illuminated dot appears to the user to be projected onto the target. Effective use of an OEG requires both of the user's eyes, sometimes referred to as binocular vision. One example of a commercially available OEG for use on rifles, handguns, and grenade launchers, is the Trijicon "Armson O.E.G.®." OEGs have significant advantages over other types of sighting devices in high-stress and close combat situations that require extremely fast target acquisition without compromising the user's overall situation awareness.

Like other prior art OEGs, the Armson O.E.G. mounts on either the side or the top of the receiver of the weapon. However, neither of these arrangements is a natural location for binocular viewing, and mounting an OEG on the top of the receiver interferes with the use of conventional open sights. These mounting arrangements also change the balance of the firearm, require the use of a custom or modified holster, and require the use of a substantially modified shooting position depending on which sighting device is being used. The term OEG may be used herein to refer to a sight designed to be used as an occluded eye gun sight or to a standard reflex sight that may be occluded such that it can be used as an occluded eye gun sight.

Accurate use of all firearms requires extensive repetitive use. However, the use of live ammunition for training is expensive and requires access to a shooting range. Dry firing—firing the weapon without ammunition—may be an effective training exercise because it allows for the repetition needed to develop muscle memory, and the user may practice in a wide range of locations and situations. However, absent highly specialized and expensive training simulation systems, dry firing does not provide real-time user feedback regarding the accuracy of the practice "shot." This lack of user feedback significantly undermines the value of dry fire training.

A long felt but as yet unsatisfied need therefore exists for an improved sighting device that overcomes the disadvantages of prior art sighting devices and provides for improved dry fire training.

SUMMARY

Various gun sights for firearms and related methods of use are provided. In one embodiment, an optical sight for a handgun is provided. The sight includes a light source. The sight also includes an optical system that projects an approximately collimated beam of light from the light source toward a user of the sight to create an image of an illuminated reticle. The optical sight is positioned behind a barrel of the handgun such that it is generally centered on a longitudinal axis of the barrel of the handgun. Other embodiments are also provided as further disclosed herein.

In one embodiment, a gun sight includes a light source adapted to project light; a user-viewable interface; and an optical element comprising: a substantially central external surface adapted to pass the light to provide a reticle at a substantially central area of the user-viewable interface, and a substantially peripheral external surface adapted to refract the light to provide a guide at a peripheral area of the user-viewable interface to aid a user to reposition the gun sight to view the reticle.

In another embodiment, a method of operating a gun sight includes projecting light from a light source; passing the light through a substantially central external surface of an optical element to provide a reticle at a substantially central area of a user-viewable interface; and refracting the light by a substantially peripheral external surface of the optical element to provide a guide at a peripheral area of the user-viewable interface to aid a user to reposition the gun sight to view the reticle.

In another embodiment, a method of operating a gun sight includes moving the gun sight to a first position; viewing a guide at a peripheral area of a user-viewable interface of the gun sight while the gun sight is at the first position; moving the gun sight to a second position based on the guide; and viewing the reticle at a substantially central area of the user-viewable interface while the gun sight is at the second position, wherein the reticle is not viewable by the user while the gun sight is at the first position.

In another embodiment, a gun sight alignment apparatus includes a first alignment member adapted to be mounted substantially behind a barrel of a gun; a second alignment member adapted to be mounted substantially between the first alignment member and a gun sight; and wherein the first and second alignment members are adapted to rotate independently of each other to adjust an alignment of the gun sight relative to the gun.

In another embodiment, a method of aligning a gun sight includes rotating a first alignment member mounted substantially behind a barrel of a gun to adjust an alignment of the gun sight relative to the gun; rotating a second alignment member mounted substantially between the first alignment member and the gun sight to further adjust the alignment of the gun sight relative to the gun; and wherein the first and second alignment members rotate independently of each other.

In another embodiment, an apparatus includes a retaining member adapted to be secured to a gun and comprising a plurality of first surfaces exhibiting compound angles relative to a plane corresponding to a top surface of the gun; a mounting member adapted to be secured to a gun sight and comprising a plurality of second surfaces exhibiting compound angles substantially complementary to the first surfaces; wherein the mounting member is adapted to be inserted into the retaining member to attach the gun sight to the gun; wherein the first and second surfaces are adapted to contact each other as the mounting member is inserted into the retaining member; and wherein the compound angles of the first and second surfaces are oriented to cause the retaining member to push the mounting member toward the gun as the mounting member is inserted into the retaining member.

In another embodiment, a method includes inserting a mounting member into a retaining member to attach a gun sight to a gun, wherein: the retaining member is secured to the gun and comprises a plurality of first surfaces exhibiting compound angles relative to a plane corresponding to a top surface of the gun, and the mounting member is secured to a gun sight and comprises a plurality of second surfaces exhibiting compound angles substantially complementary to the first surfaces; and contacting the first and second surfaces against each other as the mounting member is inserted into the retaining member, wherein the compound angles of the first and second surfaces cause the retaining member to push the mounting member toward the gun as the mounting member is inserted into the retaining member.

In another embodiment, an apparatus includes a mounting member adapted to be secured to a gun sight and comprising an engagement member and a plurality of flanges extending from the engagement member; a retaining member adapted to be secured to a gun and comprising an aperture shaped to substantially correspond to at least one of the flanges; and wherein the engagement member is adapted to be inserted into the retaining member through the aperture and rotated within the retaining member to attach the gun sight to the gun.

In another embodiment, a method includes inserting an engagement member of a mounting member through an aperture of a retaining member; rotating the engagement member within the retaining member to attach a gun sight to a gun; wherein the mounting member is secured to the gun sight and comprises a plurality of flanges extending from the engagement member; and wherein the retaining member is secured to the gun and the aperture is shaped to substantially correspond to at least one of the flanges.

In another embodiment, a gun sight alignment apparatus includes a mounting member adapted to be fixed relative to a gun and comprising first and second alignment surfaces; a spring in contact with the first alignment surface to rotate a gun sight in a first direction to adjust an alignment of the gun sight relative to the gun; and a screw in contact with the second alignment surface to rotate the gun sight in a second direction substantially opposite to the first direction to adjust the alignment of the gun sight relative to the gun in response to a user manipulation of the screw.

In another embodiment, a method of aligning a gun sight includes providing a mounting member adapted to be fixed relative to a gun and comprising first and second alignment surfaces; providing a spring in contact with the first alignment surface to rotate the gun sight in a first direction to adjust an alignment of the gun sight relative to the gun; and manipulating a screw in contact with the second alignment surface to rotate the gun sight in a second direction substantially opposite to the first direction to adjust the alignment of the gun sight relative to the gun.

In another embodiment, an apparatus includes a retaining member adapted to be secured to a gun; a mounting member adapted to be secured to a gun sight and inserted into a cavity of the retaining member in a direction substantially perpendicular to a top surface of the gun to attach the gun sight substantially behind a barrel of the gun; and a screw adapted to pass through the retaining member into the cavity and push against a front surface of the mounting member to secure the mounting member to the retaining member.

In another embodiment, a method includes inserting a mounting member into a cavity of a retaining member to attach a gun sight substantially behind a barrel of a gun, wherein: the retaining member is secured to the gun, and the mounting member is secured to the gun sight and inserted into the cavity in a direction substantially perpendicular to a top surface of the gun; and tightening a screw against a front surface of the mounting member to secure the mounting member to the retaining member, wherein the screw passes through the retaining member into the cavity to contact the mounting member.

The scope of the invention is defined by the claims, which are incorporated into this section by reference. A more complete understanding of embodiments of the present invention will be afforded to those skilled in the art, as well as a real-

ization of additional advantages thereof, by a consideration of the following detailed description of one or more embodiments. Reference will be made to the appended sheets of drawings that will first be described briefly.

BRIEF DESCRIPTION OF THE FIGURES

FIGS. **1-2** illustrate various uses of an OEG in accordance with embodiments of the invention.

FIGS. **3-4** illustrate various mountings of a gun sight on a pistol in accordance with embodiments of the invention.

FIGS. **5-16** illustrate various implementations of a gun sight employing a reflective optical implementation in accordance with embodiments of the invention.

FIGS. **17-22** illustrate various implementations of a gun sight employing a refractive optical implementation in accordance with embodiments of the invention.

FIG. **23** illustrates a light source diode (LED) in accordance with an embodiment of the invention.

FIGS. **24-32** illustrate various additional implementations of gun sight employing a refractive optical implementation in accordance with embodiments of the invention.

FIG. **33** illustrates an implementation of a gun sight which may be used with a pistol having a hammer in accordance with an embodiment of the invention.

FIGS. **34-37** illustrate various implementations of gun sight which may be used with a hammerless or striker fired pistol in accordance with embodiments of the invention.

FIG. **38** (shown as FIGS. **38**A-**38**B) and **39** (shown as FIGS. **39**A-**39**B) illustrate various circuit components which may be provided as part of a gun sight in accordance with embodiments of the invention.

FIGS. **40**A-B illustrate various mountings of a gun sight on a gun in accordance with embodiments of the invention.

FIGS. **41**A-B illustrate isometric views of a gun sight in accordance with embodiments of the invention.

FIGS. **42**A-B illustrate exploded views of a gun sight in accordance with embodiments of the invention.

FIGS. **43**A-B illustrate various mountings of a gun sight on a gun in accordance with embodiments of the invention.

FIGS. **44**A-B illustrate isometric views of a gun sight in accordance with embodiments of the invention.

FIGS. **45**A-B illustrate exploded views of a gun sight in accordance with embodiments of the invention.

FIGS. **46**A-H illustrate various views of an optical element of a gun sight in accordance with embodiments of the invention.

FIG. **47** illustrates a cross-sectional view through the optical element of FIG. **46**C as seen along the lines of the section **47-47** taken therein in accordance with an embodiment of the invention.

FIG. **48** illustrates a cross-sectional view through another optical element in accordance with an embodiment of the invention.

FIG. **49**A illustrates a user's view of a window of a gun sight in accordance with an embodiment of the invention.

FIGS. **49**B-C illustrate various positions of a user's eye in relation to a gun sight in accordance with embodiments of the invention.

FIG. **50** illustrates a block diagram of various components of a gun sight and a holster in accordance with an embodiment of the invention.

FIGS. **51**A-B illustrate alignment members for a gun sight in accordance with embodiments of the invention.

FIG. **51**C illustrates a cross-sectional view through the gun sight of FIG. **44**B as seen along the lines of the section **51**C-**51**C taken therein in accordance with an embodiment of the invention.

FIGS. **51**D-**53** illustrate alignment members for a gun sight in accordance with embodiments of the invention.

FIGS. **54**A-**58**B illustrate various adjustments of alignment members for a gun sight in accordance with embodiments of the invention.

FIGS. **59**A-**64**B illustrate various aspects of a wedge attachment mechanism for a gun sight in accordance with embodiments of the invention.

FIGS. **64**C-D illustrate various aspects of another wedge attachment mechanism for a gun sight in accordance with embodiments of the invention.

FIGS. **65**A-**68** illustrate various aspects of a rotary attachment mechanism for a gun sight in accordance with embodiments of the invention.

FIGS. **69**A-C illustrate various aspects of another rotary attachment mechanism for a gun sight in accordance with embodiments of the invention.

FIGS. **70**A-B illustrate various mountings of a gun sight on a gun in accordance with embodiments of the invention.

FIGS. **71**A-B illustrate isometric views of a gun sight in accordance with embodiments of the invention.

FIGS. **72**A-B illustrate exploded views of a gun sight in accordance with embodiments of the invention.

FIGS. **73**A-**75**D illustrate an alignment system for a gun sight in accordance with embodiments of the invention.

FIGS. **76**A-B illustrate cross-sectional views through the gun sight of FIG. **71**B as seen along the lines **76**A-**76**A taken therein in accordance with embodiments of the invention.

FIGS. **77**A-B illustrate cross-sectional views through the gun sight of FIG. **71**B as seen along the lines **77**A-**77**A taken therein in accordance with embodiments of the invention.

FIGS. **78**A-B illustrate various mountings of a gun sight on a gun in accordance with embodiments of the invention.

FIG. **79** illustrates an exploded view of an attachment mechanism for a gun sight in accordance with an embodiment of the invention.

FIGS. **80**A-**82**B illustrate various assembled and disassembled views of an attachment mechanism for a gun sight in accordance with embodiments of the invention.

FIGS. **83**A-**83**B illustrate various views of a retaining member of an attachment mechanism for a gun sight in accordance with embodiments of the invention.

FIG. **84**A illustrates a cross-sectional view through the attachment mechanism of FIGS. **80**A-B as seen along the lines **84**A-**84**A taken therein in accordance with an embodiment of the invention.

FIG. **84**B illustrates a cross-sectional view through the attachment mechanism of FIGS. **80**A-B as seen along the lines **84**B-**84**B taken therein in accordance with an embodiment of the invention.

Embodiments of the present invention and their advantages are best understood by referring to the detailed description that follows. It should be appreciated that like reference numerals are used to identify like elements illustrated in one or more of the figures.

DETAILED DESCRIPTION

The following description is presented to permit any person skilled in the art to make and use the invention. For purposes of explanation, specific nomenclature is set forth to provide a thorough understanding of various embodiments of the invention. Descriptions of specific embodiments or appli-

cations are provided only as examples. Various modifications to the embodiments will be readily apparent to those skilled in the art, and general principles defined herein may be applied to other embodiments and applications without departing from the spirit and scope of the invention. Thus, the invention is not intended to be limited to the embodiments shown, but is to be accorded the widest possible scope consistent with the principles and features disclosed herein.

In one exemplary embodiment of the present invention, a reflex sight, shown here as an opaque or occluded eye gun sight (OEG), is positioned on a firearm such that the illuminated reticle or dot is disposed such that it is substantially centered on the longitudinal axis of the barrel of the gun. In the various example embodiments described below, the general description is made in the context of an M1911 45 caliber Colt/Browning automatic pistol. However, it should be understood that the invention described herein may be utilized with a wide variety of firearms, including automatic pistols with and without exposed hammers (striker fired) and including automatic pistols manufactured by Glock, Smith & Wesson, Colt, Beretta, Ruger, Desert Arms, SIG-Sauer, Steyr, Israel Weapon Industries, and others where appropriate. Discussion herein at times refers to an OEG, but those of skill in the art will understand that the concepts disclosed are equally applicable to any reflex or similar type of sight.

Unlike most dispart and telescopic sights, which require the user to close one eye and sight the firearm through their other eye, OEGs require binocular vision. Thus, the user must have both eyes open when sighting the weapon. Referring to FIGS. **1** and **2**, the use of an OEG **100** will be described. FIG. **1** shows an OEG **100** from the user's perspective, with the rear sight **120** (e.g., a conventional notched iron sight or other appropriate sight) and front sight **124** (e.g., a conventional dispart iron sight or other appropriate sight) visible above the OEG **100**. FIG. **2** shows a target field **188** in the form of a typical cut-out paper or cardboard target.

With reference to both FIGS. **1** and **2**, one eye of the user is used to view the target field **188**, including the specific desired point of impact **190**. The second eye, typically the user's dominant eye, is positioned behind the OEG **100** such that the OEG **100** obscures the view of the target field **188** from that second eye. The OEG **100** includes some form of an indicator that is viewed with the user's second eye. This indicator is typically an illuminated feature such as an illuminated dot **192**, most commonly formed by a beam of collimated light that is projected toward the user's eye from the OEG. This indicator will commonly be referred to herein as an illuminated dot, an aim dot, or a reticle, but it will be understood by those skilled in the art that the indicator may take a wide variety of forms including various shapes and/or colors. The user's second eye thus sees the lens assembly **150** and the illuminated dot **192** of the OEG **100**, but does not see the target field **188**. The user's first eye sees the target field **188** but does not see the OEG **100**.

The two different images seen by the user's first eye and second eye are then superimposed by the user's brain, such that when the OEG **100** is properly positioned relative to the target field the user "sees" the illuminated dot **192** of the OEG **100** superimposed onto the target field **188**, as indicated by the dashed outline **192** in FIG. **2**. To the user, the illuminated dot **192** thus appears to be projected onto the target field **188**, even though it is actually being projected toward the user's second eye from the OEG **100** and nothing is being physically projected onto the target field **188**. As with other sights, the user aligns the weapon such that illuminated dot **192** is disposed directly on the desired point of impact. If the OEG **100** is accurately aligned with the bore of the barrel of the gun, the point of impact may be accurately conveyed to the user by the apparent position of the illuminated dot **192** on the target field **188**.

The OEG **100** includes a light source that provides light to an optical device (e.g., a reflector, a lens, and/or one or more other appropriate optical members). The optical device may pass the light to the user (e.g., by reflection, refraction, and/or one or more other appropriate optical techniques) as a beam of collimated light which appears to the user as the illuminated dot **192**.

Referring to FIGS. **3-4**, an embodiment of the invention is shown as it might be used on a typical 1911 pistol **10**. The sight **300** is contained in a housing **304** that is attached to the slide **12** and it is positioned directly behind the firing mechanism such as the hammer **14** such that the sight **300** is aligned substantially co-axially with the longitudinal axis A of the barrel of the pistol **10** so that the illuminated dot **192** is generally centered on the central axis of the barrel. This mounting position minimizes any impact on the balance of the weapon and gives the user the impression of seeing "through" the pistol as their dominant eye is aligned with the longitudinal axis A of the barrel of the pistol. The sight **300** is also aligned consistent with the pistol's front and rear sights **120** and **124** that sit on the top of the slide **12**, and is positioned so that it does not interfere with the use of the iron sights. This allows the user to have access to both the sight **300** and the front and rear sights **120** and **124**, or any other sighting devices mounted on the top or side of the weapon, while requiring only a slight adjustment in shooting position and mechanics to switch between the various sighting options.

In an exemplary embodiment, the illuminated dot **192** seen by the user is created by an illuminated dot generator or plane wave generator disposed within the housing **304**. The illuminated dot generator comprises a light source and some form of optical device, typically a collimating optical device, to produce a plane wave of light that appears to the user as an illuminated dot focused at infinity. In one embodiment, the illuminated dot generator must be mounted within the housing **304** to establish the nominal alignment of the illuminated dot **192** within the sight **300**. The housing **304** is then mounted to the firearm **10** and may be pre-aligned at the factory for a standard range (typically 25 yards using standard ammunition) or its alignment may be user adjustable for range (up and down) and/or windage (side-to-side).

The illuminated dot generator may use a wide variety of mechanisms to generate the illuminated dot **192**, including both refractive and reflective systems designed to create the desired collimated beam of light. In a reflective system, the light source projects light away from the user's eye. This light is then reflected back toward the user by a reflective surface such as a parabolic reflective mirror. In a refractive system, the light source typically projects light directly back toward the user's eye. This light is then shaped by a refractive optic, typically some type of lens.

An embodiment of a reflective sight **300** in accordance with an embodiment of the invention is illustrated in FIGS. **5-16**. In this embodiment, the illuminated dot generator incorporates a parabolic mirror **315** that reflects light from a point light source **362** toward the rectangular aperture **353** of the sight **300** as a collimated beam of light. The aperture **353** is a transparent, planar, rectangular "window" through which the illuminated dot **192** is seen by the user. In one embodiment, the window **353** may be coated with an optical filter that passes only light of one or more selected wavelength(s).

Light source **362** is powered by a small battery **364**, such as a ⅓ N cell lithium or NiCad battery, contained in a cylindrical

battery compartment **366** in the housing **304** and held therein by a small, threaded battery door **368** and a compression spring **370**.

The housing **304** of the sight **300** includes a pair of parallel, forwardly extending mounting ears **322**, one of which, viz., the right ear **322**, may be shorter than the other, or vice versa. In another embodiment, the ears **322** may be approximately equal in length. The forward pin **344** establishes two fixed positions on the slide of the firearm while the rearward pin **346** fixes the position of the housing rotationally. Removal of the rearward pin **346** allows the housing **304** to be rotated upward and removed from the slide for gun cleaning.

This embodiment may include a pair of light source **362** push button control switches **309** (e.g., up and down buttons in one embodiment). Selectively depressing one or both of the switches **309** may, for example, increase or decrease the brightness (e.g., intensity) of the light source **362** of the sight **300**, turn the light source on or off, serve to program an on-off timer incorporated in appropriate control circuitry of the sight **300**, and/or perform other operations as may be desired in various embodiments. In one embodiment, the pushbuttons **309** may be mounted on a printed circuit board (PCB) **311** and interconnected to the light source **362** via a thin, flat, flexible cable **313**, as illustrated in, e.g., FIG. **6**. The pushbuttons would signal the control unit on the PCB **311** to increase or decrease the brightness of the illuminated dot **192**. The sight **300** may also include a potentiometer **312** that may be used to adjust the brightness of light provided by the light source **362** which permits adjustment of the brightness of the illuminated dot **192**.

In one embodiment, PCB **311** may be used to provide one or more of various circuit components illustrated in FIGS. **38-39**. The various components of FIGS. **38-39** may be used with any of the PCBs of any of the gun sights disclosed herein. Referring now to FIGS. **38-39**, PCB **311** may include a microcontroller **502** (e.g., also referred to as "uC" which may be a PIC18F26K20 microcontroller available from Microchip Technology Inc. of Chandler, Ariz. in one embodiment), operational amplifiers **504**A-B (e.g., 8506ACB operational amplifiers available from Analog Devices, Inc. of Norwood, Mass. in one embodiment), an accelerometer **510** (e.g., a KXPS5 series tri-axis accelerometer such as any of model numbers KXPS5-1050, KXPS5-2050, KXPS5-3157, KXPS5-4457, or others available from Kionix, Inc. of Ithaca, N.Y. in one embodiment), a socket **512** (e.g., to permit testing and programming of microcontroller **502** while PCB **311** is installed in a gun sight in one embodiment), a connector **516** (e.g., a FH19SC-4 socket available from Hirose Electric USA, Inc. of Simi Valley, Calif. to connect to cable **313** in one embodiment), switch contacts **518**A-B (e.g., 7 mm spring snap contacts in one embodiment) for switches **309**, an ambient light sensor **522** (e.g., which may include photodiode **176** and may be a TPS852 illumination sensor available from Toshiba America Electronic Components, Inc. of Irvine, Calif. in one embodiment), a battery connection and protection circuit **524**, and various other components as shown.

It will be appreciated that various components of FIGS. **38-39** may be interconnected with each other through circuit connections (e.g., through pins, circuit board traces, or otherwise) labeled with various signals as shown. In one embodiment, the various pins of microcontroller **502** may be used in the manner set forth in the following Table 1:

TABLE 1

pins of microcontroller 502

Pin	Signal/Connection Name (type)	Operation
1	LIGHT_LEVEL (analog)	Analog light level from ambient light sensor; digitized by microcontroller's A/D converter and used to adjust LED intensity for proper viewing
2	not connected	not connected
3	not connected	not connected
4	Z_AXIS (analog)	Z-Axis accelerometer signal; digitized by microcontroller's A/D converter and used for hammer fall detection; intelligent power control may be provided by selectively powering LED and/or other components in response to detection that gun sight is in use (e.g., a shooting mode)
5	Gnd (power)	System ground; power return path (1 of 2)
6	not connected	not connected
7	LS_power (power)	Power supply to ambient light sensor; light sensor may be powered down when not necessary for battery longevity when gun sight is not in use (e.g., not in a shooting mode)
8	ACC_enable (digital)	Communications enable for accelerometer; normally low, pulled high during serial communications with accelerometer via Serial Peripheral Interface (SPI)
9	ACC_CS (digital)	Chip select for accelerometer; may be used for accelerometer operation; low starts data acquisition/conversion; stays low until SPI data transfer from current conversion is completed
10	LED_DRIVE (digital/power)	Drive signal to illuminate LED; pulse width modulation (PWM) signal; PWM duty cycle controls LED's intensity (1 of 4); 4 outputs provide current to LED (e.g., each output may be limited to 25 mA maximum in one embodiment)
11	SCL (digital)	SPI clock; clock signal for SPI communications with accelerometer
12	SDO (digital)	SPI data out; data output signal for SPI communications with accelerometer
13	SDI (digital)	SPI data in; data input signal for SPI communications with accelerometer
14	TX (digital)	RS-232 data output; RS-232 data path used for system development/troubleshooting
15	RX (digital)	RS-232 data input; RS-232 data path used for system development/troubleshooting

TABLE 1-continued

pins of microcontroller 502		
Pin	Signal/Connection Name (type)	Operation
16	Gnd (power)	System ground; power return path (2 of 2)
17	Vcc (power)	System power; from battery; after reverse polarity protection field effect transistor (FET)
18	INTR (digital)	Interrupt from accelerometer; programmable interrupt from accelerometer; used to wake up sleeping systems in event of large acceleration as part of intelligent power control
19	LED_DRIVE (digital/power)	Drive signal to illuminate LED; PWM LED drive signal (2 of 4); see pin 10
20	LED_DRIVE (digital/power)	Drive signal to illuminate LED; PWM LED drive signal (3 of 4); see pin 10
21	UP (digital)	Signal from up button; normally high; low indicates that up button is depressed
22	LED_DRIVE (digital/power)	Drive signal to illuminate LED; PWM LED drive signal (4 of 4); see pin 10
23	DOWN (digital)	Signal from down button; normally high; low indicates that down button is depressed
24	PCLK (digital)	Programming clock; clock signal for uploading program into microcontroller
25	PDAT (digital)	Programming data; data signal for uploading program into microcontroller
26	VPP/MCLR (power)	Programming voltage supply; pulled to programming voltage (Vpp) by external hardware to program microcontroller; held at Vcc for normal operation
27	Y_AXIS (analog)	Y-Axis accelerometer signal; digitized by microcontroller's A/D converter; see pin 3
28	X_AXIS (analog)	X-Axis accelerometer signal; digitized by microcontroller's A/D converter; see pin 3

In one embodiment, microcontroller **502** may be configured with appropriate instructions (e.g., software instructions) to provide intelligent power control features for a gun sight. For example, microcontroller **502** may be used to detect weapon orientation and motion in response to various input signals such as, for example, signals received from accelerometer **510**. Such detected information may be used by instructions running in microcontroller **502** to identify a current intended use of the weapon (e.g., to identify whether or not a user is ready to fire the weapon). In response to this identified intended use, microcontroller **502** may selectively provide (e.g., supply, limit, and/or interrupt) power to any desired electronic components of the gun sight.

For example, if microcontroller **502** identifies that a user is ready to fire the weapon, then microcontroller **502** may supply power to appropriate electronic components of the gun sight to operate the gun sight in a firing mode (e.g., in live fire or dry fire modes). As another example, if microcontroller **502** identifies that a user is not ready to fire the weapon (e.g., the weapon may be holstered or otherwise not in a firing position), then microcontroller **502** may limit and/or interrupt power to appropriate electronic components of the gun sight to conserve power (e.g., to permit longer battery life to be realized).

In one embodiment, the various pins of accelerometer **510** may be used in the manner set forth in the following Table 2:

TABLE 2

pins of accelerometer 510		
Pin	Signal/Connection Name (type)	Operation
1	Vcc (power)	System power; from battery; after reverse polarity protection FET (1 of 3)
2	ACC_CS (digital)	Chip select; may be used for accelerometer operation; low starts data acquisition/conversion; stays low until SPI data transfer from current conversion is completed
3	SDI (digital)	SPI data in; data input signal for SPI communications with microcontroller
4	SDO (digital)	SPI data out; data output signal for SPI communications with microcontroller
5	SCL (digital)	SPI clock; clock signal for SPI communications with microcontroller
6	ACC_Enable (digital)	Communications enable; high from microcontroller permits accelerometer to communicate via SPI
7	XOUT (analog)	Accelerometer X axis signal; buffered by op-amp and presented to microcontroller's A/D converter
8	YOUT (analog)	Accelerometer Y axis signal; buffered by op-amp and presented to microcontroller's A/D converter
9	ZOUT (analog)	Accelerometer Z axis signal; buffered by op-amp and presented to microcontroller's A/D converter

TABLE 2-continued

pins of accelerometer 510

Pin	Signal/Connection Name (type)	Operation
10	Gnd (power)	System ground; power return path
11	INTR (digital)	Accelerometer interrupt; Programmable interrupt; goes high if programmed acceleration value is exceeded in one embodiment; may be used by microcontroller to wake from sleep mode to support intelligent power control
12	MOT ENABLE (digital)	Interrupt enable; pulled high (Vcc) to allow generation of interrupt signal (see pin 11)
13	Vcc (power)	System power; from battery; after reverse polarity protection FET (2 of 3)
14	Vcc (power)	System power; from battery, after reverse polarity protection FET (3 of 3)

In one embodiment, the various pins of ambient light sensor **522** may be used in the manner set forth in the following Table 3:

TABLE 3

pins of ambient light sensor 522

Pin	Signal/ Connection Name (type)	Operation
1	LS_power (power)	Light sensor power; may be supplied by microcontroller output; low/off saves power for intelligent power control; high/on allows operation
2	Gnd (power)	Ground; power return path
3	Gnd (power)	Ground; power return path
4	Gnd (power)	Ground; power return path
5	Gnd (power)	Ground; power return path
6	LIGHT (analog)	Analog output; voltage may be a function of detected ambient light in one embodiment

In one embodiment, the various pins of operational amplifier **504**A may be used in the manner set forth in the following Table 4:

TABLE 4

pins of operational amplifier 504A

Pin	Signal/ Connection Name (type)	Operation
A2	LS_power (power)	Light sensor power; may be supplied by microcontroller output; low/off saves power for intelligent power control; high/on allows operation
C2	Gnd (power)	Ground; power return path
C1	LIGHT (analog)	Analog light level from ambient light sensor; voltage may be a function of detected ambient Light in one embodiment
B1, A1	LIGHT_LEVEL (analog)	Buffered light level; sent to microcontroller's A/D converter for digitization
C3	ZOUT (analog)	Z axis signal from accelerometer; amplitude may be a function of Z axis measured acceleration in one embodiment
B3, A3	Z_AXIS (analog)	Buffered Z axis level; sent to microcontroller's A/D converter for digitization

In one embodiment, the various pins of operational amplifier **504**B may be used in the manner set forth in the following Table 5:

TABLE 5

pins of operational amplifier 504B

Pin	Signal/ Connection Name (type)	Operation
A2	LS_power (power)	Light sensor power; light sensor may be powered down (e.g., when not needed) for battery longevity in response to detection that gun sight is not in use (e.g., not in a shooting mode)
C2	Gnd (power)	Ground; power return path
C1	YOUT (analog)	Y axis signal from accelerometer; amplitude may be a function of Y axis measured acceleration in one embodiment
B1, A1	Y_AXIS (analog)	Buffered Y axis level; sent to microcontroller's A/D converter for digitization
C3	XOUT (analog)	X axis signal from accelerometer; amplitude may be a function of X axis measured acceleration in one embodiment
B3, A3	X_AXIS (analog)	Buffered X axis level; sent to microcontroller's A/D converter for digitization

In one embodiment, the various pins of battery connection and protection circuit **524** may be used in the manner set forth in the following Table 6:

TABLE 6

pins of battery connection and protection circuit 524

Pin	Signal/ Connection Name (type)	Operation
1	Gnd (power)	System ground; reference pin for backwards battery detection
2	Vcc (power)	System power; if pin 1 is negative relative to reference pin 3 (battery inserted backwards), FET turns off and no current flows in one embodiment; if pin 1 is positive relative to reference pin 3 (battery inserted correctly), FET turns on to provide power supply to system in one embodiment
3	BATT (power)	Battery positive; connected to positive battery terminal
J2	BATT (power)	System power (prior to polarity protection); power supply from battery
J3	Gnd (power)	System ground; main power return path to battery

In one embodiment, the various pins of switch contact **518**A may be used in the manner set forth in the following Table 7:

TABLE 7

pins of switch contact 518A

Pin	Signal/ Connection Name (type)	Operation
1	Gnd (digital)	System ground; power return path
2	UP (digital)	Up button pressed signal; pulled high internally by microcontroller; pulled to ground by up button press

In one embodiment, the various pins of switch contact **518**B may be used in the manner set forth in the following Table 8:

TABLE 8

pins of switch contact 518B

Pin	Signal/ Connection Name (type)	Operation
1	Gnd (digital)	System ground; power return path
2	DOWN (digital)	Down button pressed signal; pulled high internally by microcontroller; pulled to ground by down button press

In one embodiment, the various pins of socket **512** may be used in the manner set forth in the following Table 9:

TABLE 9

pins of socket 512

Pin	Signal/ Connection Name (type)	Operation
1	BATT (power)	Remote power to system (prior to polarity protection); provides power to system if battery is not installed; provided by external hardware through connector
2	PCLK (digital)	Programming clock; clock signal for uploading program into microcontroller; provided by external hardware through connector
3	TX (digital)	RS-232 data output; RS-232 data path used for system development/troubleshooting
4	not connected	not connected
5	RX (digital)	RS-232 data input; RS-232 data path used for system development/troubleshooting
6	PDAT (digital)	Programming data; data signal for uploading program into microcontroller; provided by external hardware through connector
7	Gnd (power)	System ground; power return path; provided by external hardware
8	VPP/MCLR (digital)	Programming voltage supply; pulled to programming voltage (Vpp) by external hardware to program microcontroller; held at Vcc by onboard resistor for normal operation

In one embodiment, the various pins of connector **516** may be used in the manner set forth in the following Table 10:

TABLE 10

pins of connector 516

Pin	Signal/ Connection Name (type)	Operation
1	Gnd (power)	System ground; power return path (1 of 2)
2	Gnd (power)	System ground; power return path (2 of 2)
3	LED_DRIVE (digital/power)	Drive signal to illuminate LED; PWM signal; PWM duty cycle controls LED's intensity (1 of 2)
4	LED_DRIVE (digital/power)	Drive signal to illuminate LED; PWM signal; see pin 3 (2 of 2)

In one embodiment, test connections shown in FIGS. **38-39** and may be used in the manner set forth in the following Table 11:

TABLE 11

test connections

Pin	Signal/ Connection Name (type)	Operation
J5	TX (digital)	RS-232 data output; RS-232 data path used for system development/troubleshooting
J6	RX (digital)	RS-232 data input; RS-232 data path used for system development/troubleshooting
J7	Vcc (power)	System power; power supply after reverse polarity protection FET
J13	INTR (digital)	Accelerometer interrupt; programmable interrupt; goes high if programmed acceleration value is exceeded in one embodiment; may be used by microcontroller to wake from sleep mode to support intelligent power control
J14	LED_DRIVE (digital/power)	PWM signal; PWM duty cycle controls LED's intensity
SW1a	UP (digital)	Up button pressed signal; pulled high internally by microcontroller; pulled to ground by up button press
SW2a	DOWN (digital)	Down button pressed signal; pulled high internally by microcontroller; pulled to ground by down button press

Referring now to FIG. **8**, the illuminated dot generator of the sight **300** comprises a rearward facing parabolic mirror or reflector **315**, and an LED point light source **362** mounted on a PCB **317** disposed to face toward the reflector **315**. As illustrated in FIG. **8**, the PCB **317** and light source **362** are arranged such that light from the light source **362** radiates forwardly toward the parabolic reflective surface of the reflector **315** and is thereby reflected as a collimated beam of light rearward through the rectangular aperture **353** of the sight **300**. The path taken by the light rays in an embodiment **300** is illustrated diagrammatically in FIG. **11**. The result is a collimated plane wave that is seen by the user as an illuminated dot focused at infinity.

The parabolic reflector **315** may be constructed of a variety of materials and may be configured in a wide variety of ways. For example, the reflective surface may be integrated into a molded plastic part, or it may be a separate component that is affixed to a frame or other structure. As illustrated in, e.g., FIGS. **9-11**, the reflector **315** may incorporate alignment features, such as forward extending protrusions **319** on the rear of the reflector **315** for aligning the reflector **315** in the housing **304**, and, for example, cylindrical bores **321** extending into the front of the reflector **315** for aligning the PCB **317** and light source **362** with the reflective surface of the reflector **315**.

FIGS. **17-22** are perspective views of a "refractive" sight **100** in accordance with an embodiment of the invention, shown mounted at a rear end of a slide **102** of an associated automatic pistol. The remainder of the pistol, such as a hammer, grip, trigger, and the like are omitted for clarity. This embodiment includes mechanisms that allow the user to adjust the elevation of the sight **100** in the field.

With reference to the exploded view of FIG. **22**, the sight **100** comprises a generally rectangular housing **104** having a stepped, rectangular opening **106** at a rear end thereof, an upper surface **108**, and a forwardly protruding portion **110** that defines a pair of ears **112** that extend downward so as to straddle a rear end of the pistol slide **102**. Each of the ears **112** includes a lug **114** at the front end thereof, and the lugs **114** include a pair of respective front mounting pin apertures **116** that are coaxial with each other. A second pair of rear coaxial mounting pin apertures **118** is disposed in the ears **112** rearwardly of the front mounting pin apertures **116**.

In one embodiment, in order to accommodate the mounting of the sight **100**, the rear portion of the slide **102** may be modified. First, the rear sight **120** of the pistol is removed from a corresponding transverse notch in the slide **102** and reinstalled in a corresponding transverse slot **122** disposed in the upper surface **108** of the housing **104**. This permits the rear sight **120** to be used in cooperation with the front sight **124** located at the front end of the slide **102** to sight the pistol on a target in the conventional manner.

As illustrated in FIG. **22**, after the notched rear sight **120** is removed from the slide **102** and relocated as above, a T-shaped recess **126** is formed in the upper surface of the slide **102**, with the cross-bar of the T being disposed at the former location of the groove in which the notched rear sight **120** was formerly mounted, and with the vertical leg of the T extending forwardly. Coaxial mounting pin apertures **128** are formed in the slide **102** on opposite sides of the vertical leg of the T-shaped recess. A T-shaped pivot block **130** is then disposed in the T-shaped recess **126**. The pivot block **130** is shaped correspondingly to the T-shaped recess **126** in the slide **102**, and includes first and second transverse mounting pin apertures **132** and **134** and first and second threaded vertical apertures **136** and **138**. First and second elevation adjustment setscrews **140** and **142** are respectively disposed in the vertical apertures **136** and **138**.

During assembly of the sight **100** to the rear of the slide **102**, the front mounting pin apertures **116** in the ears **112** of the housing **104** are coaxially aligned with the mounting pin apertures **128** in the slide **102** and the first transverse mounting pin aperture **132** in the pivot block **130**, and a front mounting pin **144** is then inserted through apertures **116**, **128**, and **132** with a tight, frictional fit. Similarly, the rear mounting pin apertures **118** in the housing **104** are coaxially aligned with the second transverse mounting pin aperture **134** in the pivot block **130**, and a rear mounting pin **146** is then inserted through apertures **118** and **134** with a tight, frictional fit. This arrangement permits the sight **100** to pivot up and down on the forward mounting pin **144** (e.g., relative to the slide **102**) for elevation adjustment of the sight **100**, and the sight **100** is locked into the desired elevation position by suitable tightening of the first and second elevation adjustment setscrews **140** and **142**. Tool access to the setscrews **140** and **142** may be provided by suitably located access openings **143** located in the upper surface **108** of the housing **104**.

The design of this sight **100** contemplates that all azimuth adjustment of the sight **100** be effected when it is initially installed on the gun, and hence, provides only for elevation adjustment by the user. During construction and assembly of each sight **100**, at the stage at which it is mounted to the slide **102** of the gun, special care is taken to achieve very accurate azimuth alignment of the illuminated dot to the bore of the weapon. However, the mechanical design of the sight **100** does allow the sight, after removal of the rear mounting pin **146**, to be rotated upward by 90 degrees, which permits the sight **100** and slide **102** to be removed from the weapon for cleaning and to provide access to the battery compartment of the sight **100** described below.

The optical portion of the sight **100** comprises a lens assembly **150** retained in the stepped, rectangular opening **106** at the rear end of the housing **104**. In one embodiment, the lens assembly **150** comprises an aspheric lens **152** having a convex outer surface and a planar inner surface that is retained in a rectangular mounting bezel **154**. In one embodiment, the lens **152** is molded of an acrylic plastic that is dyed red and provided with a hard coating to protect the exterior surface thereof.

The lens assembly **150** defines an active rectangular aperture that, in one embodiment, may be about 1.0 in. high by about 0.9 in. wide, with corners having a radius of about 3/16 inch. The aperture is centered behind the slide **102**, with its center located approximately 0.25 in. below the axis of the barrel of the gun.

As illustrated in FIG. **22**, a PCB **156** (e.g., used for light source control) is disposed opposite to the lens assembly **150** in a front opening **158** (see FIG. **19**) at the front of a lower rear interior compartment **160** defined by the housing **104**, and point light source **162**, such as a light emitting diode or laser diode, is mounted thereon such that it is located substantially coaxially on the optical axis of the lens **152**. The light radiating from the light source **162** travels directly through the lens **152** as a plane wave and appears to the user as a red dot (e.g., a small uniform disk of light focused at infinity). In one embodiment, the light source **162** may comprise a laser diode capable of emitting red light at a wavelength of 650 nm, which yields a 1 minute of angle (MOA) red dot when viewed through the aspheric lens **152**. Light sources with other wavelengths and/or angles may be used in other embodiments.

In FIG. **22**, the light source **162** is powered by a small battery **164**, such as a 1/3 N cell lithium or NiCad battery, contained in a cylindrical battery compartment **166** in the housing **104** and held therein by a small, threaded battery door **168** and compression spring **170**. Power from the battery **164** is conveyed to the PCB **156** via a service loop of electrical wire **172** that couples between the PCB **156** and an internal battery contact **174**.

In use, the brightness of the illuminated dot produced by the light source **162** may be automatically scaled to the ambient light level using a photodiode **176** that senses ambient light through the lens assembly **150** of the sight **100**. The brightness level bias, i.e., the ratio of the brightness of the illuminated dot to the brightness of the ambient light may be scaled up or down through two orders of magnitude using a cross pin **178**, which is retained in a rectangular transverse bore **180** (e.g., which may be implemented on a left and/or a right side of housing **104** as shown in FIGS. **17-22**) in the housing **104** by an adjacent cylindrical plug **182** and friction pin **184**, and is loaded by a spring **186** in a neutral position. The cross pin **178** is arranged such that depressing the cross pin **178** toward the right side of the housing **104** reduces (e.g., "scrolls down") the brightness of the light source **162**, and depressing it left increases (e.g., "scrolls up") the brightness. In one embodiment, sight **100** may include a magnet **179** which may cooperate with a Hall effect sensor of sight **100** to permit sight **100** to detect a position of cross pin **178** (e.g., through operation of microcontroller **502**).

The sight **100** may also be turned on and off by a depression of the cross pin **178**, or alternatively, by a separate switch, and may remain on continuously, or alternatively, may remain on for a predetermined period of time, e.g., 24 hours, and then turn off automatically via a timer function incorporated in the PCB **156**. In one embodiment, a longer "on" period may be implemented, together with the ability to turn the sight **100** off by a double or triple "click" of the cross pin **178**. In one embodiment, a warning of a low battery condition in the sight **100** may be sensed by suitable voltage detection circuitry on the PCB **156** and signaled to the user by a continuous blinking of the illuminated dot. Convenient access to the cross pin **178** permits a user to easily pick up the weapon and instantly turn on the sight **100** as the weapon is brought to bear.

FIG. **23** is a cross-sectional view of an embodiment of a light emitting diode (LED) point light source **3362** in accordance with an embodiment of the invention. The LED light source **3362** may be used in any of the sights described herein. The LED light source **3362** comprises a light emitting diode junction **3364**, which may be a laser diode in one embodiment, formed at the upper ends of a conductor **3366** of the device, which is hermetically sealed in a housing **3368**. An opening in the upper end of the housing **3368** is closed with a spherical lens **3370**, through which light generated by the device is radiated in a hemispherical direction.

Another embodiment of a refractive sight **200** in accordance with an embodiment of the invention is illustrated in FIGS. **24-28**, wherein the housing **204** is shown as though transparent to reveal underlying structure, such as the battery compression spring **270**. The sight **200** is similar in construction and operation to the sight **100** described above, but with the following exceptions. The forward protruding portion **210** of the housing **204** of the sight **200** may eliminate the transverse upper surface **108** of the sight **100** and instead comprises a pair of parallel, forwardly extending ears **222** that are adapted to straddle an elongated land **207** (see FIG. **28**) mounted on the upper surface of the slide **202** of an associated pistol. The housing **204** may be secured to the slide **202** by appropriate pins (e.g., pin **244**) extending through apertures **216** and **218**. A rear sight **220** may be provided on housing **204** to permit aiming the associated pistol (e.g., in cooperation with a corresponding front sight **124**) with conventional open sights if desired.

As illustrated in FIGS. **26** and **30**, the LED point light source **262** of the sight **200** is disposed on a shoulder **201** of a cylindrical recess **203** that extends forwardly into a conical cavity **205** defined by the housing **204** to radiate rearwardly toward the lens **252** of the lens assembly **250** which is secured to the housing **204** by a perimeter surface **254**. This arrangement permits the light source **262** to be more precisely located on the optical axis of the lens **252**.

Light source **262** is powered by a small battery **264**, such as a ⅓ N cell lithium or NiCad battery, contained in a cylindrical battery compartment **266** in the housing **204** and held therein by a small, threaded battery door **268** and a compression spring **270**. As shown in FIG. **29**, the particular optical implementation of sight **200** may be implemented in housing **104** of sight **100** if desired in one or more embodiments.

Any of the guns sights described herein may be mounted on the slide **12** of an associated automatic pistol **10**, e.g., a M1911 Colt/Browning automatic pistol. For example, as shown in FIG. **33**, such pistols may incorporate an exposed hammer **14** located at the rear of the slide **12**. A sight may mount at the rear of the slide **12** of the gun **10** so as to clear the hammer **14** as it moves in an arc from a fully cocked position, as illustrated in FIG. **33**, to a fully forward position adjacent the rear end of the slide **12**. The hammer **14** prevents mounting the sight directly to the rear face of the slide **12**.

As will be appreciated, many firearms including many automatic and semi-automatic pistols do not have an external hammer **14**, and instead, incorporate an internal mechanism for striking the firing pin of the weapon. These may be referred to as "hammerless" or "striker fired." As illustrated in FIGS. **34-37**, any of the sights described herein may be adapted for use with such hammerless or striker fired pistols, and may be mounted directly to the rear face of the slide **13** in such cases. FIG. **34** illustrates the slide **13** of a hammerless automatic pistol. A removable flat plate at the rear of the slide **13** retains the firing pin. This plate may be replaced with an adapter plate **402** that facilitates attachment of the sight, such as a dovetail adapter plate. Various other structures may be used to attach the sight to a hammerless pistol in the desired location on axis with the barrel of the firearm such that it is aligned substantially co-axially with the longitudinal axis B (see FIG. **35**) of the barrel of the weapon.

Various types of mechanisms may be used to provide for field adjustment where desirable. As illustrated in FIG. **35**, in one embodiment a flexure **404** may be mounted to a back surface of the adapter plate **402**, and the sight may be mounted to a back surface of the flexure **404**. As illustrated in FIG. **36**, the flexure **404** may comprise a block of a resilient material in one embodiment, e.g., a heat-treated steel alloy, that is machined or otherwise formed to incorporate the three leaves **406**, **408**, and **410** that are hinged relative to each other at respective edges disposed at approximately 90 degrees to each other.

Thus, one leaf **406** is affixed to the back of the adapter plate **402**, an intermediate leaf **408** is hinged horizontally at a solid hinge **412** relative to the first leaf **406** so as to provide azimuth adjustment, and a third leaf **410** is arranged to hinge vertically at a second solid hinge **414** relative to the intermediate leaf **408** so as to provide elevation adjustment. As illustrated in FIGS. **36** and **37**, the flexure **404** may be assembled with adjustment screws **452**, index plungers **453**, pressure springs **454**, set screws **455**, over travel stops **456**, adjustment locking nuts **457**, securing wedges **458**, securing clamps **459**, dowel pins **460**, and securing screws **461**. Advantageously, adjustment screws **452** may permit the sight to be mounted to the rear surface of the third leaf **410** of the flexure **404** and then adjusted for both azimuth and elevation. It will be readily understood that a wide variety of other mechanisms may be used to provide for field adjustment of the sight. For example, systems using interchangeable prisms, cam mechanisms, spherical bearings, or T-blocks may be used to provide varying degrees of adjustability on the different axes.

With all sighting devices, including open reflex sights and OEGs, that use an illuminated dot that is viewed through an aperture, if the weapon is significantly out of alignment with the target or if the user's eye is too far out of alignment with the aperture the illuminated dot may not be visible to the user. This is a particular problem in very low light conditions where the user cannot see the firearm as it is brought into firing position, and thus lacks visual cues to bring the weapon into alignment.

It will be readily understood that the larger the aperture **353** the easier it will be for the user to align the sight with the user's dominant eye such that the collimated beam of light projected through the aperture can be seen by the user. Positioning the sight behind the slide of a pistol or the frame of a revolver allows for the largest possible aperture that will not interfere with balance and profile of the weapon. For example, an aperture that extends substantially the width of the slide of the pistol and vertically from the top of the slide

down to the top of the user's hand maximizes the size of the aperture without interfering with use of the iron sights on the top of the slide and without a bulky projection from the top or side of the firearm.

In an exemplary embodiment of the invention, an indicator may be included in the gun sight to provide a visual cue to help the user obtain a general alignment of the firearm with the target. If the firearm is positioned such that the user cannot see the illuminated dot, an indicator dot in a different color than the illuminated dot may be provided. This indicator dot may be visible, for example, at an edge of the aperture of the gun sight, such that it indicates the direction the firearm needs to be moved to bring the user's eye into correct alignment to acquire the illuminated dot. For example, if the firearm is too low for the user to see the illuminated dot, the indicator dot may appear at the top edge of the aperture, indicating that the firearm needs to be raised higher to bring the sight into correct alignment with the user's eye.

It has long been understood that accurate and effective use of firearms, particularly in high-stress situations such as combat or tactical response, requires extensive training so that the user's develops sufficient muscle memory that their actions become unconscious. Unfortunately, firearms training is extremely expensive in large part because of the cost of ammunition and limited availability of training facilities such as shooting ranges where live ammunition or training blanks may be used. "Dry firing" is the firing of a firearm without either live ammunition or a training blank in the chamber. Dry fire training eliminates the cost of ammunition or blanks, can be conducted virtually anywhere, and allows trainees to conduct an unlimited number of repetitions of the movements involved in bringing their weapon to bear on a target in every conceivable scenario. Thus, there is a need for a gun sight that can be used as a "dry firing" training tool either on its own or as part of a complete firearms or tactical training system.

In one exemplary embodiment, a gun sight of any type may be equipped with a detector, such as an accelerometer (e.g., accelerometer **510**), an audio detector or any other suitable device, that can detect the operation of the weapon's firing mechanism such as the fall of the hammer **14**. If the detector is activated, when the user pulls the gun's trigger the detector will detect the operation of the firing mechanism, and cause some feedback (e.g., a visible, audible, tactile, or other type of indication) to be output to the user at the instant the weapon would fire if a round was chambered. For example, in one embodiment, a sensor such as accelerometer **510** may provide one or more signals to microcontroller **502** in response to operation of the firing mechanism. In response to the one or more signals, microcontroller **502** may cause appropriate components of the gun sight to provide the feedback.

The feedback provided to the user could take many forms. In one exemplary embodiment, the illuminated dot **192** of the gun sight may increase in brightness for an instant to indicate to the user that a shot has been fired. When the illuminated dot **192** flashes, the user's brain registers the location of the dot **192** relative to the aim point **190** at the instant the trigger is pulled. This allows the user to see where the gun was aimed at the instant the weapon would have fired. In another exemplary embodiment, the illuminated dot **192** briefly changes color at the instant the weapon was fired. Persons of ordinary skill in the art will understand that a wide variety of audio, visual, or tactile indicators may be used to indicate to the user the instant that the weapon would have fired if ammunition was being used. In one exemplary embodiment, data regarding the location, orientation, movement, and aim point relative to a target can be collected by sensors located on the weapon or in the target field at the instant of firing. This data can then be analyzed to determine the accuracy of the dry fire shots.

Such a system allows users to train effectively by dramatically increasing the number of times they bring their weapon to bear on a target, while providing immediate feedback to the user regarding their accuracy. Regular use of this dry firing technique may greatly improve the user's marksmanship without having to expend ammunition or to train at a secure practice range. This dry fire training technique also allows users to train under more realistic conditions because it allows the user to target any object that may be a threat. For combat and law enforcement training, the ability to conduct firearms training in which the user is targeting a live human being is particularly important to realistically simulate conditions that may be encountered in the field and train users to overcome their natural resistance to targeting a human being.

As those of skill in the art will appreciate, the gun sights described herein provide a number of distinct advantages, relative to the various gun sights of the prior art. Unlike prior art OEGs and open reflex sights, the conventional open sights on the firearm are not obscured and the balance of the weapon is not altered significantly. The inventive gun sights provide for fast target acquisition in combat situations while allowing the user to maintain a wide field of view, avoid tunnel vision, and maintain situational awareness. Because of their positioning and low sight profile, the gun sights disclosed herein may be used with regular pistol holsters and may be used for concealed carry.

Additional embodiments are also provided. For example, in some embodiments, a gun sight may be positioned behind the barrel of a gun and configured to provide a reticle in a user-viewable interface superimposed over a target field. In additional embodiments, a gun sight may be implemented with an optical element having surfaces configured to refract light at peripheral portions of a user-viewable interface to aid the user in aligning the user's eye with a reticle provided by the gun sight.

In additional embodiments, a gun sight may be implemented with alignment members having tapered surfaces configured to rotate relative to each other to adjust the alignment of the gun sight relative to a longitudinal axis of a barrel of a gun.

In additional embodiments, a gun sight may be implemented with an alignment system using one or more springs and more or more user operable screws to adjust the alignment of the gun sight relative to a longitudinal axis of a barrel of a gun.

In additional embodiments, a gun sight may be implemented with various attachment mechanisms, such as various mounting members that may be attached to retaining members secured to guns. For example, a wedge attachment mechanism may be used to releasably attach the gun sight behind a barrel of a gun. As another example, a rotary attachment mechanism may be used to releasably attach the gun sight behind a barrel of a gun. Other attachment mechanisms are also provided.

These and other embodiments are further described herein. Moreover, any of such embodiments may be combined with each other and/or with other embodiments previously described herein as desired to implement gun sights with any of the various features described herein.

FIGS. **40**A-B illustrate various mountings of a gun sight **4010**A on a gun **4000** in accordance with embodiments of the invention. Gun sight **4010**A is positioned behind the barrel of gun **4000** and mounted substantially along an axis **5402**. The orientation of gun sight mounting axis **5402** may be adjusted

relative to a longitudinal axis **5400** of a barrel of gun **4000** in response to the rotation of one or more alignment members **4214** and **4216**. In FIGS. **40**A-B (and also in FIGS. **43**A-B further described herein), gun **4000** is illustrated as a Glock pistol, however other types of handguns, firearms, and/or other weapons may be used.

Gun sight **4010**A is implemented as a reflex sight providing a user-viewable interface at a rear window **4238**A where a user (e.g., a user's eye **4004**) may view a target field and a reticle (e.g., such as an illuminated dot **192** appearing as a luminous disk and/or any other type of reticle described herein or otherwise as appropriate) superimposed thereon. In some embodiments, the user-viewable interface may be provided by optical element **4232** and/or other components without window **4238**A. Light from a target field may enter a front window **4218**, pass through an optical element **4232**, and pass through rear window **4238**A for viewing by the user. A light source **4231** (e.g., any type of light source, such as those described herein, see FIG. **42**B) may project light through optical element **4232** (see FIG. **47**) to provide the reticle as a collimated beam at rear window **4238**A for viewing by the user along an axis **4002**A. Thus, the reticle may be used to aim gun **4000** relative to a target field.

FIGS. **41**A-B illustrate isometric views of gun sight **4010**A in accordance with embodiments of the invention, and FIGS. **42**A-B illustrate exploded views of gun sight **4010**A in accordance with embodiments of the invention. Gun sight **4010**A includes a housing **4222**A configured to receive various components. Optical element **4232** is secured within housing **4222**A by screws **4234**. A circuit board **4228** is affixed to a circuit board **4229**A and includes light source **4231** to project light for the reticle into optical element **4232**. A battery **4224**A provides power to circuitry of gun sight **4010**A and is secured within housing **4222**A by a cover **4226**A. Front window **4218** and a spacer **4220** are positioned in an aperture in a front portion of housing **4222**A.

A rear cover **4242** is secured to housing **4222**A on top of a gasket **4236** by screws **4244**. A user-operable knob **4246**, loaded by a spring **4230**, actuates a switch **4248** (e.g., an implementation of a user control) to selectively operate light source **4231** and/or other features of gun sight **4010**A. For example, in some embodiments, switch **4248** may be rotated to adjust the intensity of light provided by light source **4231** (e.g., having two or more light intensity levels) and/or control the operation of any of the various other features described herein. Rear window **4238**A and a spacer **4240** are positioned in an aperture in rear cover **4242**.

A wedge mounting member **4212**A, having front and rear surfaces **4211**A and **4213**A, is used to releasably attach gun sight **4010**A to a wedge retaining member **5900** mounted behind the barrel of gun **4000**. For example, in some embodiments, wedge retaining member **5900** may be mounted to a slide **4001** of gun **4000**. Wedge mounting member **4212**A is secured to housing **4222**A by a screw **4210**A.

Alignment members **4214** and **4216** are installed around a cylindrical protrusion **4219**A of housing **4222**A, and positioned between a front surface **4217**A of housing **4222**A and rear surface **4213**A of wedge mounting member **4212**A. One or more substantially flat surfaces **5110**, **5112**, **5114**, and/or **5116** of alignment members **4214**/**4216** may be tapered (e.g., inclined) to permit gun sight **4222**A to be selectively adjusted relative to gun **4000** by rotation of one or both of alignment members **4214**/**4216** as further described herein. In particular, rotation of alignment members **4214**/**4216** may change the orientation of axis **5402** relative to longitudinal axis **5400** of the barrel of gun **4000** in order to accurately sight gun sight **4010**A on gun **4000**.

FIGS. **43**A-B illustrate various mountings of a gun sight **4010**B on gun **4000** in accordance with embodiments of the invention. Similar to gun sight **4010**A, gun sight **4010**B is positioned behind the barrel of gun **4000** and mounted substantially along axis **5402** that may be adjusted relative to longitudinal axis **5400** of the barrel of gun **4000** in response to the rotation of one or more alignment members **4214** and **4216**. In FIGS. **43**A-B, axes **5400** and **5402** are aligned with each other.

Gun sight **4010**B includes light source **4231** (e.g., any type of light source, such as those described herein, see FIG. **45**B) that projects light through optical element **4232** (see FIG. **47**) to provide a reticle as a collimated beam at a rear window **4238**B for viewing by the user along an axis **4002**B, which is aligned with axes **5400** and **5402** in FIGS. **43**A-B. Gun sight **4010**B is implemented as an occluded sight. As similarly described for OEG **100** with regard to FIGS. **1-2**, the user's first eye (not shown) may view the target field. The user's second eye **4004** may view a reticle (e.g., any type of reticle described herein or otherwise as appropriate) provided by gun sight **4010**B while the target field is substantially occluded (e.g., blocked) by gun sight **4010**B and/or gun **4000**, when viewed from the perspective of the user's second eye **4004**.

The two different images seen by the user's first eye and second eye **4004** are then superimposed by the user's brain, such that when gun sight **4010**B is properly positioned relative to the target field, the user "sees" the reticle superimposed onto the target field. Thus, the reticle may be used to aim gun **4000** relative to the target field.

FIGS. **44**A-B illustrate isometric views of gun sight **4010**B in accordance with embodiments of the invention, and FIGS. **45**A-B illustrate exploded views of gun sight **4010**B in accordance with embodiments of the invention. As shown, gun sight **4010**B includes a housing **4222**B configured to receive various components. Optical element **4232** is secured within housing **4222**B by screws **4234**. Circuit board **4228** is affixed to a circuit board **4229**B and includes light source **4231** to project light for the reticle into optical element **4232**. Batteries **4224**B (e.g., one illustrated and one already installed in housing **4222**B) provide power to circuitry of gun sight **4010**B and are secured within housing **4222**B by covers **4226**B. In some embodiments, multiple batteries **4224**B may be replaced by a single battery.

User-operable switches **4250** (e.g., implementations of user controls such as switch contacts **518**A-B and/or others) are provided on a circuit board **4252** to selectively operate light source **4231** and/or other features of gun sight **4010**B. For example, in some embodiments, switches **4250** may be operated to adjust the intensity of light provided by light source **4231** (e.g., having two or more light intensity levels) and/or control the operation of any of the various other features described herein. A switch cover **4254** is secured to circuit board **4252** by screws **4256**. In some embodiments, switches **4250** and related components may be used in place of knobs **4246**/**4246**C and related components in gun sights **4010**A/C, and vice versa. A window **4258** is also provided on a top surface of housing **4222**B. Rear window **4238**B is positioned in an aperture in housing **4222**B.

A wedge mounting member **4212**B is implemented in a similar manner as wedge mounting member **4212**A and operates to releasably attach gun sight **4010**B to wedge retaining member **5900** behind the barrel of gun **4000** (e.g., wedge retaining member **5900** may be mounted to slide **4001** of gun **4000**). Wedge mounting member **4212**B includes apertures for two screws **4210**B to secure it to housing **4222**B. As

shown, wedge mounting member **4212**B includes front and rear surfaces **4211**B and **4213**B.

Similar to gun sight **4010**A, alignment members **4214** and **4216** are installed around a cylindrical protrusion **4219**B of housing **4222**B, and positioned between a front surface **4217**B of housing **4222**B and rear surface **4213**B of wedge mounting member **4212**A. Similar to gun sight **4010**A, one or more surfaces **5110**, **5112**, **5114**, and/or **5116** of alignment members **4214/4216** may be tapered to permit gun sight **4222**B to be selectively adjusted relative to gun **4000** by rotation of one or both of alignment members **4214/4216** as further described herein. In particular, rotation of alignment members **4214/4216** may change the orientation of axis **5402** relative to longitudinal axis **5400** of the barrel of gun **4000** in order to accurately sight gun sight **4010**B on gun **4000**. Front surface **4217**B includes a recess **4299** configured to receive a pin **5162** and a spring **5166** (see FIG. **51**C) as further described herein.

FIGS. **46**A-H illustrate various views of optical element **4232** in accordance with embodiments of the invention. In some embodiments, optical element **4232** may be manufactured from an appropriate light transmissive material, such as plastic, acrylic, glass, and/or other materials that may pass light emitted from light source **4231** (e.g., when implemented in a reflex sight such as gun sight **4010**A or an occluded sight such as gun sights **4010**B-C) and/or light received from a target field (e.g., when implemented in a reflex sight such as gun sight **4010**A).

Optical element **4232** includes non-uniform external surfaces **4602** (e.g., substantially peripheral external surfaces in some embodiments) at several peripheral portions (e.g., peripheral areas) next to a substantially uniform external surface **4604** (e.g., a substantially central external surface in some embodiments. Non-uniform surfaces **4602** may surround one or more sides of surface **4604** in some embodiments). Non-uniform surfaces **4602** may be implemented as surfaces that refract light passing therethrough in a manner different from light passing through surface **4604**. In some embodiments, surfaces **4602** may be machined (e.g., and/or otherwise formed to provide roughened surfaces (e.g., including a plurality of peaks and valleys, chamfers, and/or appropriate non-uniformities in some embodiments) such that light passing therethrough is refracted such that it is not substantially parallel to other light passing through surface **4604**. As a result, light passing through surfaces **4602** may be redirected in comparison with light passing through surface **4604**. For example, the refraction of light passing through surfaces **4602** may cause such light to be viewable by the user over a wider field of view (e.g., over a wider angle) in comparison with light passing through surface **4604**. In some embodiments, such refracted light may be directed outward (e.g., away from) light passing through surface **4604**.

The presence of surfaces **4602** on optical element **4232** permit the user to rapidly and conveniently reposition of his eye **4004** relative to gun sight **4010**A-C and/or reposition gun sight **4010**A-C based on the appearance of refracted light that provide one or more guides to aid the user in such repositioning. As a result, the user may locate the reticle in a rapid, reliable manner to aim gun **4000**.

Optical element **4232** includes a surface **4610** which, in some embodiments, may be implemented with a reflective layer (e.g., coating) to reflect light in one or more wavebands corresponding to light received from light source **4231**. Optical element **4232** includes a surface **4606** which, in some embodiments, may be implemented with a reflective layer (e.g., coating) to reflect light in one or more wavebands corresponding to light received from light source **4231**. In some embodiments, the coating on surface **4606** may be selected to substantially pass light in one or more wavebands corresponding to light received from a target field and substantially reflect light received from light source **4231** (e.g., when implemented in a reflex sight such as gun sight **4010**A).

FIG. **47** illustrates a cross-sectional view through optical element **4232** of FIG. **46**C as seen along the lines of the section **47-47** taken therein in accordance with an embodiment of the invention. Light source **4231** emits light **4710** (e.g., illustrated as light rays) into optical element **4232** toward surface **4610**. The reflective coating on surface **4610** causes light **4710** to reflect toward surface **4606**. The reflective coating on surface **4606** causes light **4710** to reflect toward surfaces **4602** and **4604**.

Light **4710**B directed toward surface **4604** is substantially normal to surface **4604** and therefore passes substantially straight through surface **4604** toward the user to provide a reticle for viewing by the user substantially along axis **4002**A-C. In contrast, light **4710**A directed toward surface **4602** encounters the various non-uniformities in surface **4602**. These non-uniformities cause light **4710**A to pass from optical element **4232** at various oblique angles, depending on the shapes of individual non-uniformities. As a result, light **4710**A will exhibit various indexes of refraction depending on the particular shapes of individual non-uniformities defining the interface between surface **4602** of optical element **4232** and the environment. These indexes of refraction cause light **4710**A to be redirected in a manner that is not parallel to light **4710**B as shown in FIG. **47**.

FIG. **48** illustrates a cross-sectional view through another optical element **4800** in accordance with an embodiment of the invention. Optical element **4800** may be implemented in a similar manner as optical element **4232**, but with a different shape and corresponding different dimensions and focal length.

Similar to optical element **4232**, light source **4231** emits light **4810** (e.g., illustrated as light rays) into optical element **4800** toward surface **4820**. A reflective coating on surface **4820** causes light **4810** to reflect toward surface **4806**. A reflective coating on surface **4806** causes light **4810** to reflect toward surfaces **4802** (e.g., one or more substantially peripheral external surfaces in some embodiments) and surface **4804** (e.g., a substantially central external surface in some embodiments. Light **4810**A is redirected by surface **4802** (e.g., implemented with non-uniformities in the manner described for surface **4602** of optical element **4232**).

Other embodiments and implementations of surfaces **4602/4802** are also contemplated. For example, although surfaces **4602/4802** are illustrated in FIGS. **47-48** as being recessed in relation to surfaces **4604/4804** (e.g., positioned further away from the user than surface **4604/4804**), surfaces **4602/4802** may extend forward of surface **4604/4804** in other embodiments (e.g., positioned closer to the user than surface **4604/4804**).

FIG. **49**A illustrates a user's view of window **4238**A-C of gun sights **4010**A-C from a perspective near axis **4002**A-C in accordance with an embodiment of the invention. FIG. **49**A further illustrates light source **4231**, surface **4610/4820**, and an optical axis **4990**.

Rear window **4238**A-C includes a main area **4910** (e.g., a substantially central area) and peripheral areas **4920**, **4930**, and **4940**. Main area **4910** substantially corresponds to a portion of rear window **4238**A-C aligned behind surfaces **4604/4804** of optical element **4232/4800**. In some embodiments, main area **4910** is approximately 22 mm by approximately 22 mm. Peripheral areas **4920**, **4930**, and **4940** substantially correspond to portions of rear window **4238**A-C

aligned behind non-uniform surfaces **4602/4802** of optical element **4232/4800**. In some embodiments, each of peripheral areas **4920**, **4930**, and **4940** is approximately 2 mm wide.

As discussed, light **4710**B/**4710**B directed toward surfaces **4604/4804** is substantially normal to surfaces **4604/4804** and therefore passes substantially straight through surfaces **4604/4804** toward the user to provide a focused reticle for viewing by the user. This reticle appears in main area **4910** of rear window **4238**A-C.

As also discussed, light **4710**A/**4810**B directed toward surfaces **4602/4802** encounters the various non-uniformities in surfaces **4602/4802** and is redirected such that it is not parallel to light **4710**B/**4810**B. In particular, this refracted light **4710**A/**4810**A may appear in one or more peripheral areas **4920**, **4930**, and/or **4940** of rear window **4238**A-C, depending on the orientation of the user's eye **4004** in relation to gun sight **4010**A-C.

Advantageously, light **4710**A/**4810**A may be used to aid the user in aligning the user's eye **4004** relative to the reticle appearing in main area **4910**. For example, FIGS. **49**B-C illustrate various positions of the user's eye **4004** in relation to gun sight **4010**A in accordance with embodiments of the invention. Although the aiding features of light **4710**A/**4810**A will be described primarily with regard to gun sight **4010**A, such features may be applied in the same or similar manner to gun sights **4010**B-C and/or other gun sights in various embodiments.

In FIG. **49**B, the user's eye **4004** is illustrated in several positions **4950**A-C relative to axis **4002**A. For each of positions **4950**A-C, the user's eye **4004** is substantially aligned vertically with a center of main area **4910** of rear window **4238**A, but in different horizontal positions in relation to rear window **4238**A.

In position **4950**A, the user's eye **4004** is substantially aligned horizontally with axis **4002**A. As a result, while at position **4950**A, the user's eye **4004** will view the reticle provided by light **4710**B/**4810**B in main area **4910**.

In position **4950**B, the user's eye **4004** is positioned to the left of axis **4002**A. As a result, while at position **4950**B, the user's eye **4004** will have difficulty viewing the reticle provided by light **4710**B/**4810**B in main area **4910**. For example, in some embodiments, the reticle may appear only slightly or may not appear at all in the field of view of the user's eye **4004** while at position **4950**B (e.g., due to the relatively narrow viewing angle provided for the reticle, such as in a range of approximately 1 MOA to approximately 9 MOA, a range of approximately 1 MOA to approximately 10.5 MOA, or other appropriate ranges in some embodiments), and therefore may not be usable for aiming gun **4000** while the user's eye **4004** is at position **4950**B.

However, while the user's eye **4004** is at position **4950**B, light **4710**A/**4810**A may appear as a refracted light guide in peripheral area **4920**. In this regard, peripheral area **4920** of rear window **4238**A/**4238**B may appear illuminated to the user (e.g., due to the redirected light **4710**A/**4810**A), while other peripheral areas **4930** and **4940**, and main area **4910** remain substantially non-illuminated (e.g., such areas may merely show a target field in the case of a reflex sight such as gun sight **4010**A or may appear dark in the case of an occluded sight such as gun sight **4010**B). Thus, the illuminated peripheral area **4920** will signal to the user that the user should reposition his eye **4004** horizontally to the right (e.g., from position **4950**B to position **4950**A) and/or reposition gun sight **4010**A horizontally to the left (e.g., to be aligned with the user's eye **4004** at position **4950**B) in order to be aligned with the reticle to properly aim gun **4000**.

In position **4950**C, the user's eye **4004** is positioned to the right of axis **4002**A. As a result, while at position **4950**C, the user's eye **4004** will have similar difficulty viewing the reticle provided by light **4710**B/**4810**B in main area **4910**. While the user's eye **4004** is at position **4950**C, light **4710**A/**4810**A may appear as a refracted light guide in peripheral area **4930**. Thus, the illuminated peripheral area **4930** will signal to the user that the user should reposition his eye **4004** horizontally to the left (e.g., from position **4950**C to position **4950**A) and/or reposition gun sight **4010**A horizontally to the right (e.g., to be aligned with the user's eye **4004** at position **4950**C) in order to be aligned with the reticle to properly aim gun **4000**.

In FIG. **49**C, the user's eye **4004** is illustrated in several positions **4950**A and **4950**D relative to axis **4002**A. For each of positions **4950**A and **4950**D, the user's eye **4004** is substantially aligned horizontally with a center of main area **4910** of rear window **4238**A, but in different vertical positions in relation to rear window **4238**A.

In position **4950**A, the user's eye **4004** is substantially aligned vertically with axis **4002**A (e.g., as previously discussed with regard to FIG. **49**B). As a result, while at position **4950**A, the user's eye **4004** will view the reticle provided by light **4710**B/**4810**B in main area **4910**.

In position **4950**D, the user's eye **4004** is positioned above axis **4002**A. As a result, while at position **4950**D, the user's eye **4004** will have similar difficulty viewing the reticle provided by light **4710**B/**4810**B in main area **4910**. While the user's eye **4004** is at position **4950**D, light **4710**A/**4810**A may appear as a refracted light guide in peripheral area **4940**. Thus, the illuminated peripheral area **4940** will signal to the user that the user should reposition his eye **4004** downward (e.g., from position **4950**D to position **4950**A) and/or reposition gun sight **4010**A upward (e.g., to be aligned with the user's eye **4004** at position **4950**D) in order to be aligned with the reticle to properly aim gun **4000**.

In some embodiments, the refracted light guides provided in peripheral areas **4920**, **4930**, and/or **4940** may remain continuously visible to the user as eye **4004** and/or gun sight **4010**A is repositioned from a misaligned position (e.g., where the reticle is not visible to the user) to an aligned position (e.g., where the reticle is visible to the user). In some embodiments, the refracted light guides provided in peripheral areas **4920**, **4930**, and/or **4940** may remain visible to the user while eye **4004** is aligned with gun sight **4010**A (e.g., while the reticle is also visible to the user). Such implementations may permit the user to continuously rely on the refracted light guides as the user's eye **4004** and or gun sight **4010**A is repositioned.

Multiple peripheral areas may be used to signal to the user that the user should move his eye **4004** in multiple directions. For example, if the user perceives both of peripheral areas **4920** and **4940** to be illuminated (e.g., which provide two refracted light guides), this will indicate to the user to reposition his eye **4004** both downward and to the right and/or reposition gun sight **4010**A both upward and to the left in order to be aligned with the reticle. Similarly, if the user perceives both of peripheral areas **4930** and **4940** to be illuminated, this will indicate to the user to move his eye **4004** both downward and to the left and/or reposition gun sight **4010**A both upward and to the right in order to be aligned with the reticle.

Thus, by providing surfaces **4602/4802** on optical element **4232/4800**, the user may be able to rapidly and conveniently reposition his eye **4004** relative to gun sight **4010**A-C and/or reposition gun sight **4010**A-C based on the appearance of various refracted light guides in peripheral areas **4920**, **4930**,

and/or **4940**. As a result, the user may locate the reticle in a rapid, reliable manner to aim gun **4000**. Although refracted light guides have been described as being created by non-uniform surfaces **4602**/**4802**, other techniques for creating such light guides may be used where appropriate.

FIG. **50** illustrates a block diagram of various components of gun sight **4010**A-C and a holster **5052** in accordance with an embodiment of the invention. Although the components of FIG. **50** will be described primarily with regard to gun sights **4010**A-C, such components may be used with any of the various gun sights disclosed herein and may be implemented by any of the various circuit boards and/or circuitry disclosed herein.

Light source **4231** may be used to emit light to provide a reticle and refracted light guides as described herein. In some embodiments, light source **4231** may be implemented in the manner of any light sources described herein.

A microcontroller **5010** may be used to provide any appropriate processing operations of the various gun sights disclosed herein. In some embodiments, microcontroller **5010** may be implemented in the manner of microcontroller **502** described herein.

Power control **5012** corresponds to one or more circuits, user controls, and/or other components used to selectively turn on or turn off one or more components of gun sight **4010**A-C. In some embodiments, power control **5012** may be implemented in the manner of battery connection and protection circuit **524** described herein.

External control **5014** corresponds to one or more user controls to adjust the operation of microcontroller **5010**. In some embodiments, external control **5014** may be implemented in the manner of any user controls described herein.

Ambient light sensor **5016** may be used to detect light in a surrounding environment. In some embodiments, ambient light sensor **5016** may be implemented in the manner of ambient light sensor **522** described herein.

Accelerometer **5018** may be used to implement any of the various accelerometer features described herein. In some embodiments, accelerometer **5018** may be implemented in the manner of accelerometer **510** described herein.

Magnetometer **5020** may be used to provide one or more appropriate signals to microcontroller **5010** to adjust the operation of gun sight **4010**A-C when brought in proximity to a magnet. For example, in some embodiments, gun **4000** may be held by holster **5052** configured with one or more magnets **5050**. When gun **4000** is held by the holster, magnetometer **5020** may be positioned in proximity to magnets **5050**. The magnetic fields (e.g., magnetic flux) associated with such magnets **5050** may cause magnetometer to signal microcontroller **5010** that one or more electrical components of gun sight **4010**A-C should be turned off while gun **4000** is holstered. When gun **4000** is drawn from holster **5052**, magnetometer **5020** will no longer be in proximity to magnets **5050**. As a result, magnetometer **5020** may signal microcontroller **5010** that one or more electrical components gun sight **4010**A-C should be turned on while gun **4000** is unholstered. As a result, gun sight **4010**A-C may be operated with significant power savings, and without requiring the user to selectively turn gun sight **4010**A-C on and off when unholstering and holstering gun **4000**.

FIGS. **51**A-B illustrate alignment members **4214** and **4216** in accordance with embodiments of the invention. In some embodiments, alignment members **4214** and **4216** may be implemented as disks. Alignment members **4214**/**4216** may include markings (e.g., indicia and/or other indicators) **5190**, **5192**, **5194**, and **5196** to aid the user in identifying the relative positions of alignment members **4214**/**4216** to each other, gun **4000**, and/or gun sight **4010**A/**4010**B.

As shown, alignment member **4214** may include a plurality of recesses **5150** (e.g., indentations and/or other appropriate structures) in surface **5110**, and alignment member **4216** may include a plurality of recesses **5152** in surface **5116**. Recesses **5150**/**5152** may be used to secure alignment members **4214**/**4216** after they have been rotated to adjust the alignment of gun sight **4010**A/**4010**B.

For example, FIG. **51**C illustrates a cross-sectional view through gun sight **4010**B of FIG. **44**B as seen along the lines of the section **51**C-**51**C taken therein in accordance with an embodiment of the invention. Pin **5160** and spring **5164** are provided in a recess **5170** (see FIGS. **59**B and **60**A) of wedge mounting member **4212**B. Pin **5162** and spring **5166** are provided in recess **4299** (see FIG. **45**A) of front surface **4217**B of housing **4222**B.

Pins **5160** and **5162** are loaded by springs **5164** and **5166**, respectively, which push pins **5160**/**5162** into recesses **5150**/**5152**, respectively. Thus, when gun sight **4010**B is aligned, pins **5160** and **5162** engage recesses **5150** and **5152** of alignment members **4214** and **4216**, respectively, to prevent gun sight **4010**B from becoming misaligned.

In some embodiments, alignment members **4214** and **4216** may be rotated independently of each other to adjust an alignment of gun sight **4010**B relative to gun **4000**.

If the user desires to adjust the alignment of gun sight **4010**E using alignment member **4214**, the user may push alignment members **4214**/**4216** toward spring **5166** which causes pin **5160** to disengage from recesses **5150** of alignment member **4214**. As a result, alignment member **4214** may be rotated relative to alignment member **4216** while alignment member **4216** remains fixed by the engagement of pin **5162** with recesses **5152**. After alignment, the user may release alignment members **4214**/**4216** which causes pin **5160** to reengage with recesses **5150**.

Similarly, if the user desires to adjust the alignment of gun sight **4010**B using alignment member **4216**, the user may push alignment members **4214**/**4216** toward spring **5164** which causes pin **5162** to disengage from recesses **5152** of alignment member **4216**. As a result, alignment member **4216** may be rotated relative to alignment member **4214** while alignment member **4214** remains fixed by the engagement of pin **5160** with recesses **5150**. After alignment, the user may release alignment members **4214**/**4216** which causes pin **5162** to reengage with recesses **5152**. Although the above discussion has been provided in relation to gun sight **4010**B, the same or similar features may be implemented for gun sight **4010**A.

FIGS. **51**D-**53** further illustrate alignment members **4214** and **4216** in accordance with embodiments of the invention. As shown in FIGS. **52**-**53**, surfaces **5110** and **5112** may be implemented as non-parallel to each other. In this regard, surface **5112** of alignment member **4214** may be tapered slightly in relation to surface **5110**. In some embodiments, surface **5112** may be inclined in a range of approximately 0.5 degrees to approximately 1.0 degrees relative to an axis of rotation (e.g., axis **5400**). Similarly, surface **5114** of alignment member **4216** may be tapered slightly in relation to surface **5116**. In some embodiments, surface **5114** may exhibit a taper in a range of approximately 0.5 degrees to approximately 1.0 degrees relative to an axis of rotation (e.g., axis **5402**). In some embodiments, alignment members **4214** and **4216** may be implemented in an arrangement similar to a Risley prism but applied in the different context of mechanical alignment of gun sight **4010**A/**4010**B.

When gun sight **4010**A/**4010**B is installed on gun **4000**, surface **5110** faces toward gun **4000**, is substantially concentric with longitudinal axis **5400** (e.g., alignment member **4214** rotates about axis **5400**), and is adapted to interface with and rotate relative to a fixed surface associated with gun **4000** (e.g., rear surface **4213**A/B of wedge mounting member **4212**A/B, a rear surface of slide **4001**, and/or others). Surfaces **5112** and **5114** interface with each other and are adapted to rotate relative to each other. Surface **5116** faces toward gun sight **4010**A/**4010**B, is substantially concentric with axis **5402** of gun sight **4010**A/**4010**B (e.g., alignment member **4216** rotates about axis **5402**), and is adapted to interface with and rotate relative to gun sight **4010**A/**4010**B (e.g., front surface **4217**A/B). The orientation of axis **5402** changes in relation to axis **5400** as alignment members **4214** and **4216** are rotated due to the inclination of surfaces **5112** and **5114** relative to axes **5400** and **5402**, respectively.

In FIG. **51**D, alignment members **4214** and **4216** are positioned in contact with and parallel to each other with surfaces **5112** and **5114** exhibiting substantially complementary tapers. As a result, surfaces **5110** and **5116** are also substantially parallel to each other. In this orientation, axis **5402** of gun sight **4010**A/**4010**B is aligned with longitudinal axis **5400** of the barrel of gun **4000**.

When alignment members **4214** and **4216** are rotated relative to each other, surfaces **5112** and **5114** remain in contact remain in contact with and substantially parallel to each other, but the tapers of surfaces **5112** and **5114** are no longer complementary to each other. The contact of these non-complementary surfaces **5112** and **5114** against each other causes alignment members **4214** and **4216** to tip relative to each other, causing surfaces **5110** and **5116** to exhibit a non-parallel orientations relative to each other. As a result, the orientation of axis **5402** will change in relation to longitudinal axis **5400** of the barrel of gun **4000** (e.g., the position of gun sight **4010**A/**4010**B will change relative to gun **4000**). As the position of gun sight **4010**A/**4010**B changes, the axis **4002**A/**4002**B along which a reticle is provided will also change. Thus, by rotating alignment members **4214**/**4216** relative to each other, the alignment of the reticle (e.g., along axis **4002**A/**4002**B) can be adjusted in order to sight gun **4000** as desired. Moreover, after the reticle alignment has been determined, the selected position of gun sight **4010**A/**4010**B can be maintained by the engagement of pins **5160**/**5162** with recesses **5150**/**5152** as discussed.

FIGS. **54**A-**58**B illustrate alignment members **4214** and **4216** in different positions resulting in different orientations of gun sight **4010**A/**4010**B relative to gun **4000** in accordance with embodiments of the invention. In FIGS. **54**A-B, alignment members **4214** and **4216** are positioned in the manner shown in FIG. **51**D. As discussed, in this position, surfaces **5110** and **5116** are substantially parallel to each other. As a result, axes **5400** and **5402** are parallel and concentric with each other (e.g., as viewed from the barrel of gun **4000** back toward gun sight **4010**A/**4010**B) in FIG. **54**B.

In FIGS. **55**A-B, alignment member **4214** is rotated 90 degrees relative to alignment member **4214**. This causes axis **5402** to be directed upward and to the left as viewed from axis **5400** in FIG. **55**B.

In FIGS. **56**A-B, alignment member **4214** is rotated 180 degrees relative to alignment member **4214**. This causes axis **5402** to be directed upward as viewed from axis **5400** in FIG. **56**B.

In FIGS. **57**A-B, alignment member **4216** is rotated 90 degrees relative to alignment member **4214** (e.g., in the opposite direction as alignment member **4214** was rotated in FIGS. **55**A-B). This causes axis **5402** to be directed downward and to the left as viewed from axis **5400** in FIG. **57**B.

In FIGS. **58**A-B, alignment member **4216** is rotated 180 degrees relative to alignment member **4214**. This causes axis **5402** to be directed downward as viewed from axis **5400** in FIG. **58**B. Other orientations of alignment member **4214** and **4216** may be used to adjust axis **5402** in other directions as may be desired (e.g., in any direction 360 degrees around axis **5400** as viewed from the barrel of gun **4000**).

Thus, by selectively rotating alignment members **4214**/**4216** relative to each other, gun sight **4010**A/**4010**B may be adjusted for azimuth and elevation. The orientation of axes **4002**A-B along which reticles are projected to the user are substantially parallel to mounting axis **5402** and are thus also adjusted as the alignment of gun sights **4010**A-B change. As a result, the position of the reticle viewed by the user relative to gun **4000** may be adjusted to sight gun **4000** as desired.

Although surfaces **5110**, **5112**, **5114**, and **5116** have been described as substantially flat surfaces. Other embodiments are also contemplated. For example, in some embodiments, one or more of such surfaces may exhibit a substantially rounded and/or a substantially spherical contour.

Gun sight may **4010**A/**4010**B may be implemented with various attachment mechanisms, such as various mounting members that may be attached to retaining members secured to gun **4000**. For example, FIGS. **59**A-**64**B illustrate various aspects of a wedge attachment mechanism **5990** for gun sight **4010**A/**4010**B in accordance with embodiments of the invention. Wedge attachment mechanism **5990** includes a mounting member implemented as a wedge mounting member **4212**B (e.g., a substantially wedge-shaped mounting member), and also includes a retaining member implemented as a wedge retaining member **5900**. Although wedge attachment mechanism **5990** will be described primarily with regard to wedge mounting member **4212**B and gun sight **4010**B, the principles described herein may be applied to wedge mounting member **4212**A, gun sight **4010**A, and/or other appropriate components in other embodiments.

As discussed, wedge mounting member **4212**B is used to releasably attach gun sight **4010**B to wedge retaining member **5900** mounted behind the barrel of gun **4000**. In some embodiments, wedge retaining member **5900** may be mounted to slide **4001** of gun **4000**.

Wedge mounting member **4212**B includes front surface **4211**B, rear surface **4213**B, tapered external surfaces **5902**, tapered external surfaces **5904**, an engagement member **5920**, and recess **5170**. Wedge retaining member **5900** includes tapered interior surfaces **5912**, tapered interior surfaces **5914**, a channel **5930**, a shaft **5952**, and a pin **5970**.

As shown in FIGS. **60**A-B, wedge mounting member **4212**B may be moved (e.g., lowered, slid) generally in the direction of an arrow **5992** for insertion into a cavity **5980** bounded at least in part by surfaces **5912** and **5914** of wedge retaining member **5900**. As wedge mounting member **4212**B is inserted into wedge retaining member **5900**, surfaces **5912** of wedge retaining member **5900** are proximate to surfaces **5902** of wedge mounting member **4212**B. For example, surfaces **5912** and **5902** may be used to guide wedge mounting member **4212**B as it is inserted into wedge retaining member **5900**.

As shown in FIGS. **61**A-**63**B, surfaces **5904** and **5914** are provided at substantially complementary compound angles. For example, surfaces **5910** are provided at compound angles relative to a plane defined by a top surface of gun **4000** (e.g., a top surface **4003** of slide **4001** and/or other appropriate surface); planes defined by a top surface **5984** and a bottom surface **5982** of wedge mounting member **4212**B; and/or

planes **5932**. In this regard, planes **5932** are parallel to side surfaces **5931** of wedge retaining member **5900**. Surfaces **5914** are provided at compound angles relative to planes defined by: a top surface of gun **4000** (e.g., top surface **4003** of slide **4001** and/or other appropriate surface); a top surface **5988**; a bottom surface **5986**; and/or side surfaces **5931** of wedge retaining member **5900**.

As wedge mounting member **4212**B is inserted into wedge retaining member **5900**, bottom edges **5994** and surfaces **5904** of wedge mounting member **4212**B contact surfaces **5914** of wedge retaining member **5900**. As wedge mounting member **4212**B is further inserted into wedge retaining member **5900**, the compound angle configuration of surfaces **5904** and **5914** causes wedge mounting member **4212**B to also move in the direction of and arrow **5993** (see FIGS. **60**A-B) as surfaces **5904** and **5914** push against each other. This compound angle configuration permits wedge mounting member **4212**B to be driven into tighter engagement with wedge retaining member **5900** than if surfaces **5904** and **5914** were not configured with compound angles.

Also, as wedge mounting member **4212**B is inserted into wedge retaining member **5900**, engagement member **5920** is inserted into channel **5930** to engage with a tooth **5950** (e.g., a lock member) of a shaft **5952**. Engagement member **5920** includes a lower surface **5922**, a side surface **5924**, and an upper surface **5926**.

As shown in FIGS. **64**A-B, shaft **5952** is loaded (e.g., biased) by a spring **5956** and includes tooth **5950**, a user-operable surface **5954**, a recess **5972**, and a recess **5958**. The overall movement of shaft **5952** is limited by pin **5970** contacting inside surfaces of recess **5972**. Recess **5958** permits engagement member **5920** to pass through shaft **5952**.

In some embodiments, engagement member **5920** may be implemented with a substantially trapezoidal shape as shown in FIGS. **60**A and **63**B. As engagement member **5920** enters channel **5930**, lower surface **5922** contacts tooth **5950**. Spring **5956** operates to bias (e.g., push) tooth **5950** against engagement member **5920**. The angle of surface **5922** pushes against tooth **5950** to retract shaft **5952** back against spring **5956** along an axis **5960** to slide tooth **5950** and shaft **5952** from a locked position to an unlocked position. As engagement member **5920** is further inserted into channel **5930**, shaft **5952** remains retracted against spring **5956** (e.g., in an unlocked position) by side surface **5924**. As engagement member **5920** is inserted even further into channel **5930**, the angle of upper surface **5926** permits tooth **5950** to pass over and engage with upper surface **5926** (e.g., in a locked position). As tooth **5950** moves with shaft **5952**, spring **5956** expands to hold tooth **55950** against upper surface **5926**, thus locking wedge mounting member **4212**B into wedge retaining member **5900** and engagement member **5920** in channel **5930**. The user may unlock wedge mounting member **4212**B from wedge retaining member **5900** (e.g., and also unlock engagement member **5920** from channel **5930**) by providing a user input (e.g., pushing against user-operable surface **5954**) which disengages tooth **5950** from upper surface **5926**, compresses spring **5956**, and permits engagement member **5920** to slide out of channel **5930**.

Thus, wedge mounting member **4212**B may be selectively engaged and disengaged with wedge retaining member **5900** in a convenient manner through the operation of engagement member **5920**, shaft **5952**, and spring **5956**. Moreover, the compound angles of surfaces **5904** and **5914** permit wedge mounting member **4212**B to be tightly held by wedge retaining member **5900** while so engaged. Such a configuration permits gun sight **4010**A/**4010**B to be accurately sighted while being rigidly attached to gun **4000**. In addition, adjustment members **4214**/**4216** are mounted behind wedge mounting member **4212**B (e.g., near gun sight **4010**A/**4010**B, see FIG. **51**C). As a result, gun sight **4010**A/**4010**B may be selectively attached to and removed from gun **4000** (e.g., through the installation and removal of wedge mounting member **4212**B with wedge retaining member **5900** which is attached to the rear of gun **4000**) in a secure, rigid manner without requiring the user to resight gun **4000** (e.g., readjust the alignment of gun sight **4010**A/**4010**B) each time gun sight **4010**A/**4010**B is attached and removed.

FIGS. **64**C-D illustrate various aspects of another wedge attachment mechanism for a gun sight in accordance with embodiments of the invention. In particular, a wedge retaining member **5900**C is illustrated which includes similar features as shown in FIGS. **64**A-B. Wedge retaining member **5900**C may be used with a wedge mounting member (e.g., wedge mounting member **4212**C shown in FIGS. **73**A-F) having an engagement member (e.g., engagement member **5920**C shown in FIG. **73**B) in a reversed orientation from that of wedge mounting member **4212**B. As shown, wedge retaining member **5900**C includes a channel **5930**C, a tooth **5950**C, a shaft **5952**C (e.g., operating along an axis **5960**C), a user-operable surface **5954**C, a spring **5956**C, a recess **5958**C, a pin **5970**C, and a recess **5972**C, which may operate in a similar, but reversed fashion as similar components of FIGS. **64**A-B (see FIGS. **70**A-B).

As another example, FIGS. **65**A-**68** illustrate various aspects of a rotary attachment mechanism **6590** for gun sight **4010**A/**4010**B in accordance with embodiments of the invention. In some embodiments, rotary attachment mechanism **6590** may be used in place of wedge attachment mechanism **5990** to releasably attach gun sight **4010**A/**4010**B to gun **4000**.

Rotary attachment mechanism **6590** includes a mounting member implemented as a rotary mounting member **6550** (e.g., configured to rotate relative to a retaining member), and also includes a retaining member implemented as a rotary retaining member **6500**. Rotary mounting member **6550** is used to releasably attach gun sight **4010**A/**4010**B to rotary retaining member **6500** mounted behind the barrel of gun **4000**. In some embodiments, rotary retaining member **6500** may be mounted to slide **4001** of gun **4000**. In some embodiments, rotary mounting member **6550** may be attached to gun sight **4010**A/**4010**B by a screw, such as screw **4210**A of FIGS. **42**A-B.

Rotary mounting member **6550** includes an engagement member **6554** (e.g., having flanges **6552**), a pin **6570**, a lock member **6572** (e.g., a pin or other device), and a spring **6574** (e.g., a leaf spring in some embodiments). Rotary retaining member **6500** includes an aperture **6502**, a pin **6506**, and a cavity **6504** bounded at least in part by front and rear walls **6508**, and side walls **6510**.

Aperture **6502** is shaped to receive engagement member **6554**. In particular, aperture **6502** is shaped to substantially correspond to at least one of flanges **6552** of engagement member **6554**. Accordingly, as shown in FIG. **68**, rotary mounting member **6550** may be rotated approximately 90 degrees relative to rotary retaining member **6550** such that engagement member **6554** and at least one of flanges **6552** is aligned with aperture **6502**. Rotary mounting member **6550** may be moved in the direction of an arrow **6580** until engagement member **6554** is substantially within cavity **6504**. Following the insertion of engagement member **6554** into rotary retaining member **6500**, rotary mounting member **6550** may be rotated approximately 90 degrees in the direction of an arrow **6582** (e.g., clockwise in some embodiments) to cause one of flanges **6552** to contact pin **6506** within cavity **6504**

(see FIG. **66**B) to align rotary mounting member **6550** and rotary retaining member **6500** with each other in the manner shown in FIGS. **65**A-B and bound the rotation of rotary mounting member **6550** and engagement member **6554**.

While so aligned, flanges **6552** are disposed between, and retained by, front and rear walls **6508**. Also, lock member **6572** (e.g., under tension from spring **6574** which is held by pin **6570**) may slide under a recess **6503** (e.g., a lip) of rotary retaining member **6500** to lock rotary mounting member **6550** in place and prevent rotary mounting member **6550** from rotating back (e.g., opposite the direction of arrow **6582**). The user may unlock rotary mounting member **6550** from rotary retaining member **6500** by pulling and/or sliding lock member **6572** and/or spring **6574** to withdraw lock member **6572** from lip **6503** which permits rotary mounting member **6550** to be rotated opposite the direction of arrow **6582** for removal from rotary retaining member **6500**.

Thus, rotary mounting member **6550** may be selectively engaged and disengaged with rotary retaining member **6500** in a convenient manner through the operation of engagement member **6554**, flanges **6552**, pin **6506**, lock member **6572**, and spring **6574**. Such a configuration permits gun sight **4010**A/**4010**B to be accurately sighted while being rigidly attached to gun **4000**. In addition, adjustment members **4214**/**4216** are mounted behind rotary mounting member **6550** (e.g., near gun sight **4010**A/**4010**B). As a result, gun sight **4010**A/**4010**B may be selectively attached to and removed from gun **4000** (e.g., through the installation and removal of rotary mounting member **6550** with rotary retaining member **6500** which is attached to the rear of gun **4000**) in a secure, rigid manner without requiring the user to resight gun **4000** (e.g., readjust the alignment of gun sight **4010**A/**4010**B) each time gun sight **4010**A/**4010**B is attached and removed.

FIGS. **69**A-C illustrate various aspects of another rotary attachment mechanism **6990** for a gun sight in accordance with embodiments of the invention. In some embodiments, rotary attachment mechanism **6990** may be used in place of wedge attachment mechanism **5990** or rotary attachment mechanism **6950** to releasably attach gun sight **4010**A/**4010**B to gun **4000**.

As shown, rotary attachment mechanism **6990** may be implemented with various similarities to rotary attachment mechanism **6950**. For example, rotary attachment mechanism **6990** includes a rotary mounting member **6950** and a rotary retaining member **6900**. FIG. **69**A illustrates rotary mounting member **6950** installed in rotary retaining member **6900** attached to a gun interface **6991** (e.g., gun interface **6991** may be part of, or used to attach rotary retaining member **6900** to, slide **4001** of gun **4000**). FIG. **69**B illustrates rotary mounting member **6950** uninstalled from rotary retaining member **6900**. FIG. **69**C illustrates rotary mounting member **6950** partially installed in rotary retaining member **6900** (e.g., inserted into and partially rotated relative to rotary retaining member **6900**), with rotary retaining member **6900** also attached to gun interface **6991**.

Rotary mounting member **6950** includes an engagement member **6954** (e.g., having flanges **6952**), a pin **6970**, a lock member **6972** (e.g., a pin or other device), and a spring **6974** (e.g., a leaf spring in some embodiments). Rotary retaining member **6900** includes an aperture **6902**, a pin (not shown) similar to pin **6506**, and a cavity **6904** bounded at least in part by front and rear walls **6908**, and side walls **6910**.

Engagement member **6954** may be inserted into cavity **6904**, and rotary mounting member **6950** may be rotated in a similar manner as described with regard to rotary attachment mechanism **6950** to align rotary mounting member **6950** with rotary retaining member **6900** as shown in FIG. **69**A. While so aligned, flanges **6952** are disposed between, and retained by, front and rear walls **6908**. Also, lock member **6972** (e.g., under tension from spring **6974** which is held by pin **6970**) may slide into a recess **6903** of rotary retaining member **6900** to lock rotary mounting member **6950** in place and prevent rotary mounting member **6950** from rotating back. The user may unlock rotary mounting member **6950** from rotary retaining member **6900** by pulling and/or sliding lock member **6972** and/or spring **6974** to withdraw lock member **6972** from lip **6503** which permits rotary mounting member **6550** to be rotated for removal from rotary retaining member **6900**.

Thus, rotary mounting member **6950** may be selectively engaged and disengaged with rotary retaining member **6900** in a convenient manner through the operation of engagement member **6954**, flanges **6952**, pin **6906**, lock member **6972**, and spring **6974**. Such a configuration permits gun sight **4010**A/**4010**B to be accurately sighted while being rigidly attached to gun **4000**. In addition, adjustment members **4214**/**4216** are mounted behind rotary mounting member **6950** (e.g., near gun sight **4010**A/**4010**B). As a result, gun sight **4010**A/**4010**B may be selectively attached to and removed from gun **4000** (e.g., through the installation and removal of rotary mounting member **6950** with rotary retaining member **6900** which is attached to the rear of gun **4000**) in a secure, rigid manner without requiring the user to resight gun **4000** (e.g., readjust the alignment of gun sight **4010**A/**4010**B) each time gun sight **4010**A/**4010**B is attached and removed.

FIGS. **70**A-B illustrate various mountings of a gun sight **4010**C on gun **4000** in accordance with embodiments of the invention. Gun sight **4010**C is positioned behind the barrel of gun **4000** and mounted substantially along axis **5402** that may be adjusted relative to longitudinal axis **5400** of the barrel of gun **4000** in response to the adjustment of one or more user-operable screws **7040**A-B as further described herein. In FIGS. **70**A-B, axes **5400** and **5402** are aligned with each other.

Gun sight **4010**C includes light source **4231** (e.g., any type of light source, such as those described herein, see FIG. **72**B) that projects light through optical element **4800** (see FIG. **48**; one or more optical elements, such as optical element **4232**, may be used in other embodiments) to provide a reticle as a collimated beam at a rear window **4238**C for viewing by the user along an axis **4002**C, which is aligned with axes **5400** and **5402** in FIGS. **70**A-B. Gun sight **4010**C is implemented as an occluded sight as similarly described for OEG **100** and gun sight **4010**B.

FIGS. **71**A-B illustrate isometric views of gun sight **4010**C in accordance with embodiments of the invention, and FIGS. **72**A-B illustrate exploded views of gun sight **4010**C in accordance with embodiments of the invention. As shown, gun sight **4010**C includes a housing **4222**C configured to receive various components. Optical element **4800** is secured within housing **4222**C by screws **4234**. Circuit board **4228** is affixed to a circuit board **4229**C (e.g., which is secured to housing **4222**C by screws **7070**) and includes light source **4231** to project light for the reticle into optical element **4800**. Battery **4224**C provides power to circuitry of gun sight **4010**C and is secured within housing **4222**C by cover **4226**C. In some embodiments, multiple batteries **4224**C may be used.

A user-operable knob **4246**C actuates a switch **4248**C (e.g., an implementation of a user control) to selectively operate light source **4231** and/or other features of gun sight **4010**C as similarly described for knob **4246** and switch **4248** of gun sight **4010**A. A window **4258** is also provided on a top surface of housing **4222**C. Rear window **4238**C is positioned in an aperture in housing **4222**C.

A wedge mounting member **4212**C operates to releasably attach gun sight **4010**C to wedge retaining member **5900**C behind the barrel of gun **4000** (e.g., wedge retaining member **5900**C may be mounted to slide **4001** of gun **4000**; see FIGS. **70**A-B). Wedge mounting member **4212**C includes an aperture for a screw **4210**C (e.g., to secure it to housing **4222**C) and may also receive a spring **7080** and a washer **7082**. As shown, wedge mounting member **4212**C includes front and rear surfaces **4211**C and **4213**C.

FIGS. **73**A-**75**D illustrate an alignment system for gun sight **4010**C in accordance with embodiments of the invention. In this regard, wedge mounting member **4212**C may be used with various other components to permit azimuth and/or elevation adjustment of gun sight **4010**C relative to gun **4000**. Screw **4210**C may be loosened (e.g., at least partially unscrewed from threads of housing **4222**C while still keeping wedge mounting member **4212**C attached to housing **4222**C in some embodiments) to permit movement of housing **4222**C and wedge mounting member **4212**C relative to each other in response to springs **7030**A-B and screws **7040**A-B to adjust azimuth and/or elevation alignment of gun sight **4010**C as further described herein. After such adjustment has been made, screw **4210**C may be tightened (e.g., screwed into threads of housing **4222**C) to secure the alignment.

As shown in FIGS. **72**A-B and **73**A-F, wedge mounting member **4212**C includes a generally cross-shaped protrusion **7002** (e.g., alignment member) having a plurality of alignment surfaces **7004**A-B and **7006**A-B. Springs **7030**A-B are provided in recesses **7031**A-B of housing **4222**C, and screws **7040**A-B are provided in apertures **7042**A-B of housing **4222**C (e.g., which, in some embodiments, may be implemented as part of a larger aperture in housing **4222**C as shown in FIGS. **75**A-B). Alignment surfaces **7004**A and **7004**B are configured to contact springs **7030**A and **7030**B, respectively. Alignment surfaces **7006**A and **7006**B are configured to contact screws **7040**A and **7040**B, respectively.

A spacer **7020** is positioned between wedge mounting member **4212**C and housing **4222**C. As shown in FIGS. **72**A-B and **74**A-C, spacer **7020** includes an aperture **7022** configured to receive protrusion **7002** therethrough. In this regard, protrusion **7002** may pass through aperture **7022** to expose alignment surfaces **7004**A-B and **7006**A-B to springs **7030**A-B and screws **7040**A-B.

While wedge mounting member **4212**C is attached to housing **4222**C by screw **4210**C, alignment surfaces **7004**A-B are held in tension against springs **7030**A-B. In this regard, springs **7030**A-B may become compressed and exert force against housing **4222**C and alignment surfaces **7004**A-B. For example, spring **7030**A may exert force against alignment surface **7004**A to push wedge mounting member **4212**C and housing **4222**C away from each other in the directions of arrows **7066**A-B (e.g., in substantially opposite arcs) to adjust an azimuth alignment of gun sight **4010**C relative to gun **4000** (e.g., see FIGS. **75**D and **77**A). Spring **7030**B may exert force against alignment surface **7004**B to push wedge mounting member **4212**C and housing **4222**C away from each other in the directions of arrows **7060**A-B (e.g., in substantially opposite arcs) to adjust an elevation alignment of gun sight **4010**C relative to gun **4000** (e.g., see FIGS. **75**C and **76**A).

Screws **7040**A-B may be selectively operated by a user to counteract the forces exerted by springs **7030**A-B. For example, screw **7040**A may exert force against alignment surface **7006**A to push wedge mounting member **4212**C and housing **4222**C away from each other in the directions arrows **7064**A-B (e.g., in substantially opposite arcs) to adjust the azimuth alignment of gun sight **4010**C relative to gun **4000** in a manner substantially opposite to arrows **7066**A-B (e.g., see FIGS. **75**D and **77**A-B). Screw **7040**B may exert force against alignment surface **7006**B to push wedge mounting member **4212**C and housing **4222**C away from each other in the directions of arrows **7062**A-B (e.g., in substantially opposite arcs) to adjust the elevation alignment of gun sight **4010**C relative to gun **4000** in a manner substantially opposite to arrows **7060**A-B (e.g., see FIGS. **75**C and **76**A-B).

Alignment surfaces **7006**A-B may be beveled, chamfered, and/or otherwise inclined (e.g., see FIGS. **73**C-F). Accordingly, as screws **7040**A-B are further advanced (e.g., screwed) into threads of housing **4222**C, screws **7040**A-B push further against alignment surfaces **7006**A-B, thus causing wedge mounting member **4212**C and housing **4222**C to rotate relative to each other in the directions of arrows **7064**A-B and **7062**A-B and counteract the rotational forces exerted by springs **7030**A-B.

For example, in the side cross-sectional view of FIG. **76**A, spring **7030**B and screw **7040**B exert substantially equal forces against alignment surfaces **7004**B and **7006**B, respectively. As a result, the mounting axis **5402** of gun sight **4010**C is substantially aligned in the same horizontal plane as the longitudinal axis **5400** of the barrel of gun **4000**.

In the side cross-sectional view of FIG. **76**B, screw **7040**B has been further advanced into threads of housing **4222**C to push further down onto alignment surface **7006**B. This advancement of screw **7040**B counteracts the force exerted by spring **7030**B, thus causing the mounting axis **5402** of gun sight **4010**C to be adjusted relative to the longitudinal axis **5400** of the barrel of gun **4000** by an angle alpha as screw **7040**B causes wedge mounting member **4212**C and housing **4222**C to rotate relative to each other in the directions of arrows **7062**A-B.

In the top cross-sectional view of FIG. **77**A, spring **7030**A and screw **7040**A exert substantially equal forces against alignment surfaces **7004**A and **7006**A, respectively (e.g., some of the described components illustrated in other figures are not shown in FIGS. **77**A-B but the effects of the described configurations are shown). As a result, the mounting axis **5402** of gun sight **4010**C is substantially aligned in the same vertical plane as the longitudinal axis **5400** of the barrel of gun **4000**.

In the top cross-sectional view of FIG. **77**B, screw **7040**A has been further advanced into threads of housing **4222**C to push further down onto alignment surface **7006**A. This advancement of screw **7040**A counteracts the force exerted by spring **7030**A, thus causing the mounting axis **5402** of gun sight **4010**C to be adjusted relative to the longitudinal axis **5400** of the barrel of gun **4000** by an angle beta as screw **7040**A causes wedge mounting member **4212**C and housing **4222**C to rotate relative to each other in the directions of arrows **7064**A-B.

As screws **7040**A-B are unscrewed from threads of housing **4222**C, screws **7040**A-B exert less force (or no force at all), thus causing less (or no) relative rotation of housing **4222**C and wedge mounting member **4212**C in the directions of arrows **7064**A-B and **7062**A-B. Springs **7030**A-B may remain in tension against alignment surfaces **7004**A-B. Thus, as screws **7040**A-B are unscrewed, springs **7030**A-B may cause wedge mounting member **4212**C and housing **4222**C to rotate relative to each other in the directions of arrows **7066**A-B and **7060**A-B as discussed.

Thus, by selectively operating screws **7040**A-B, a user may adjust the azimuth and/or elevation alignment of gun sight **4010**C relative to gun **4000**. In this regard, such operations may adjust the mounting axis **5402** of gun sight **4010**C relative to the longitudinal axis **5400** of the barrel of gun **4000**.

The orientation of axis **4002**C along which the reticle is projected to the user is substantially parallel to mounting axis **5402** and is thus also adjusted as the alignment of gun sight **4010**C changes. In some embodiments, such configurations may permit an azimuth adjustment over a range of approximately +3 degrees to approximately −3 degrees, and an elevation adjustment over a range of approximately +3 degrees to approximately −3 degrees.

Spacer **7020** and housing **4222**C are configured to permit relative movement of wedge mounting member **4212**C and housing **4222**C. As shown in FIGS. **74** A and **74**C, spacer **7020** includes substantially concave recessed surfaces **7024**. As shown in FIGS. **75**A-D, housing **4222**C includes substantially rounded surfaces **7050**. In some embodiments, surfaces **7024** and **7050** may exhibit complimentary substantially spherical contours.

Surfaces **7024** and **7050** are configured to slide against each other in a ball-and-socket arrangement as the azimuth and elevation alignment of gun sight **4010**C are adjusted. For example, as shown the top cross-sectional views of FIGS. **77**A-B, surfaces **7024** and **7050** are slideably engaged with each other to permit rotation of wedge mounting member **4212**C relative to housing **4222**C.

Other attachment mechanisms may be used to releasably attach a gun sight behind a barrel of a gun. For example, FIGS. **78**A-B illustrate various mountings of gun sight **4010**C on a gun **4000**A in accordance with embodiments of the invention. Gun sight **4010**C may be releasably attached to (e.g., mounted on) gun **4000**A using an attachment mechanism **7800**. Gun sight **4010**C is positioned behind the barrel of gun **4000**A while attached and may be adjusted in the manner previously described.

FIG. **79** illustrates an exploded view of attachment mechanism **7800** in accordance with an embodiment of the invention. FIGS. **80**A-**82**B illustrate various assembled and disassembled views of attachment mechanism **7800** in accordance with embodiments of the invention. FIGS. **83**A-**83**B illustrate various views of a retaining member **7810** of attachment mechanism **7800** in accordance with embodiments of the invention. FIG. **84**A illustrates a cross-sectional view through attachment mechanism **7800** of FIGS. **80**A-B as seen along the lines **84**A-**84**A taken therein in accordance with an embodiment of the invention. FIG. **84**B illustrates a cross-sectional view through attachment mechanism **7800** of FIGS. **80**A-B as seen along the lines **84**B-**84**B taken therein in accordance with an embodiment of the invention.

Although FIGS. **78**A-**84**B are described with regard to gun **4000**A, gun sight **4010**C, and attachment mechanism **7800**, any of the various guns, gun sights, attachment mechanisms, and/or other components described herein may be combined as appropriate.

Referring now to FIGS. **78**A-**84**B, attachment mechanism **7800** includes a retaining member **7810**, a mounting member **7850**, screws **7820**, and screws **7830**. Retaining member **7810** includes a cantilevered portion **7814** that is configured to be positioned generally over a portion of a top surface **4003**A of a slide **4001**A of gun **4000**A (e.g., see FIGS. **78**A-B). Cantilevered portion **7814** includes a tongue **7816** configured to engage a recess **7802** in top surface **4003**A of slide **4001**A. For example, in some embodiments, tongue **7816** may slide laterally (e.g., horizontally) into recess **7802** in the direction of an arrow **7803** (e.g., see FIG. **79**). In some embodiments, tongue **7816** and recess **7802** may exhibit complementary dovetail shapes to prevent tongue **7816** from moving vertically relative to recess **7802**. Although particular contours are illustrated for tongue **7816** and recess **7802** in FIG. **79**, any desired implementation may be used (e.g., tongue/groove, pin/tail, and/or other implementations).

Cantilevered portion **7814** also includes threaded apertures **7818** configured to receive screws **7820**. After tongue **7816** has been inserted into recess **7802**, screws **7820** may be tightened against a lower surface **7805** of recess **7802**. For example, as shown in FIGS. **84**A-B, screws **7820** may extend through and protrude out the bottom side of tongue **7816**. This permits screws **7820** to contact lower surface **7805** of recess **7802**. As screws **7820** are tightened and push against lower surface **7805**, angled external surfaces **7817** of tongue **7816** push against angled internal surfaces **7807** of recess **7802**. As a result, tongue **7816** is held in tension within recess **7802** to secure retaining member **7810** to slide **4003**A of gun **4000**A.

Retaining member **7810** also includes a back end portion **7812** that is configured to be positioned generally behind slide **4003**A and proximate a hammer **7804** of gun **4000**A (e.g., see FIGS. **78**A-B and **79**). Back end portion **7812** includes threaded apertures **7828** configured to receive screws **7830**. When tightened, screws **7830** may protrude into a cavity **7834** (e.g., see FIGS. **83**A-B). Cavity **7834** may be bounded by, for example: rear surfaces **7831** and **7832** of retaining member **7810**; inner surfaces **7836** of retaining member **7810**; and flanges **7840** of retaining member **7810**. In some embodiments, screws **7830** may protrude substantially the same distance into cavity **7834**, or may be tightened differently to protrude at different distances.

In some embodiments, retaining member **7810** also includes a rear sight **7806** which may be used with a front sight **7809** to aim gun **4000**A. In various embodiments, sights **7806**/**7809** may be used in addition to or instead of gun sight **4010**C. For example, sights **7806**/**7809** may be used while gun sight **4010**C is removed.

Mounting member **7850** is configured to be inserted into cavity **7834** of retaining member **7810**. For example, in some embodiments, mounting member **7850** may be lowered into retaining member **7810** in the direction of an arrow **7899** (e.g., see FIGS. **81**A-B) which is substantially perpendicular to top surface **4003**A of slide **4001**A).

Mounting member **7850** includes an aperture **7851**, protrusion **7002**, a front surface **7852**, recesses **7854**, an engagement member **7856**, and grooves **7858** in side and/or rear surfaces thereof. Aperture **7851** is configured to receive screw **4210**C (e.g., to secure mounting member **7850** to housing **4222**C in front of spacer **7020**) and may also receive spring **7080** and washer **7082** as previously described. Rear protrusion **7002** may be implemented as previously described.

As mounting member **7850** is inserted into cavity **7834**, front surface **7852** of mounting member **7850** slides against rear surface **7831** of retaining member **7810**, and grooves **7858** receive and slide against flanges **7840** in a complementary fashion. Mounting member **7850** continues to slide into cavity **7834** until engagement member **7856** (e.g., exhibiting a substantially hemispherical engagement surface in some embodiments) contacts tapered rear surface **7832** of retaining member **7810** (e.g., see FIG. **84**A), thus preventing further downward travel of mounting member **7850** relative to retaining member **7810** (e.g., to determine a maximum insertion depth of mounting member **7850** within cavity **7834** and a vertical position of gun sight **4010**C).

Mounting member **7850** may then be secured within cavity **7834** by screws **7830**. In this regard, as screws **7830** are tightened and protrude into cavity **7834**, they engage with recesses **7854** in front surface **7852** of mounting member **7850** to prevent mounting member **7850** from being withdrawn from retaining member **7810** (e.g., see FIG. **84**B). As a result, mounting member **7850** (and thus gun sight **4010**C

attached thereto) may be secured to gun **4000**A. As shown in FIG. **84**B, recesses **7854** may include receiving surfaces **7855** that are inclined relative to front surface **7852** of mounting member **7850** and complementary to bottom surfaces **7857** of screws **7830**.

Gun sight **4010**C may be subsequently aligned and operated using any of the various techniques described herein, as appropriate.

Any of the various features described herein may be combined in one or more embodiments as desired to implement various devices, methods, and/or other embodiments. For example, the various sighting techniques, mounting techniques, sighting techniques and/or other features referenced herein may be used with any of the various gun sights described herein and/or other gun sights as appropriate.

Where applicable, the various components set forth herein can be combined into composite components and/or separated into sub-components without departing from the spirit of the present invention. Similarly, where applicable, the ordering of various steps described herein can be changed, combined into composite steps, and/or separated into substeps to provide features described herein.

Embodiments described above illustrate but do not limit the invention. It should also be understood that numerous modifications and variations are possible in accordance with the principles of the present invention. Accordingly, the scope of the invention is defined only by the following claims.

What is claimed is:

1. A gun sight comprising:
- a light source adapted to project light;
- a user-viewable interface; and
- an optical element comprising:
  - a substantially central external surface adapted to pass the light to provide a reticle at a substantially central area of the user-viewable interface, and
  - a substantially peripheral external surface adapted to refract the light to provide a guide at a peripheral area of the user-viewable interface to aid a user to reposition the gun sight to view the reticle.

2. The gun sight of claim **1**, wherein:
- the guide is visible to the user and the reticle is not visible to the user while the gun sight is at a first position;
- the guide is visible to the user and the reticle is also visible to the user while the gun sight is at a second position; and
- the guide remains continuously visible to the user as the user moves the gun sight from the first position to the second position.

3. The gun sight of claim **1**, wherein the substantially peripheral external surface is one of a plurality of substantially peripheral external surfaces adapted to refract the light to provide guides at a plurality of peripheral areas of the user-viewable interface to aid the user to reposition the gun sight to view the reticle.

4. The gun sight of claim **3**, wherein the peripheral areas comprise at least two sides of the user-viewable interface.

5. The gun sight of claim **1**, wherein the substantially peripheral external surface comprises a plurality of non-uniformities adapted to refract the light as desired.

6. The gun sight of claim **5**, wherein the non-uniformities comprise machined portions of the substantially peripheral external surface.

7. The gun sight of claim **1**, wherein the optical element is adapted to project the reticle from the user-viewable interface as a collimated beam.

8. The gun sight of claim **1**, wherein the reticle is a luminous disk.

9. The gun sight of claim **1**, wherein the reticle is a red dot.

10. The gun sight of claim **1**, further comprising a user control adapted to adjust an intensity of the reticle.

11. The gun sight of claim **1**, wherein the gun sight is an occluded sight adapted to provide the reticle substantially co-axially aligned with a longitudinal axis of a barrel of a gun for use in aiming the gun.

12. The gun sight of claim **1**, wherein the gun sight is a reflex sight adapted to superimpose the reticle over a target field for use in aiming a gun.

13. The gun sight of claim **1**, further comprising a magnetometer adapted to provide a signal to adjust an operation of the gun sight based on a proximity of the magnetometer to a magnet of a holster.

14. The gun sight of claim **1**, wherein the gun sight is adapted to be releasably attached to a gun by an attachment mechanism comprising a retaining member and a mounting member.

15. A method of operating a gun sight, the method comprising:
- projecting light from a light source;
- passing the light through a substantially central external surface of an optical element to provide a reticle at a substantially central area of a user-viewable interface; and
- refracting the light by a substantially peripheral external surface of the optical element to provide a guide at a peripheral area of the user-viewable interface to aid a user to reposition the gun sight to view the reticle.

16. The method of claim **15**, wherein:
- the guide is visible to the user and the reticle is not visible to the user while the gun sight is at a first position;
- the guide is visible to the user and the reticle is also visible to the user while the gun sight is at a second position; and
- the guide remains continuously visible to the user as the user moves the gun sight from the first position to the second position.

17. The method of claim **15**, wherein the substantially peripheral external surface is one of a plurality of substantially peripheral external surfaces, the method further comprising refracting the light by the substantially peripheral external surfaces to provide guides at a plurality of peripheral areas of the user-viewable interface to aid the user to reposition the gun sight to view the reticle.

18. The method of claim **17**, wherein the peripheral areas comprise at least two sides of the user-viewable interface.

19. The method of claim **15**, wherein the refracting comprises refracting the light by a plurality of non-uniformities of the substantially peripheral external surface.

20. The method of claim **19**, wherein the non-uniformities comprise machined portions of the substantially peripheral external surface.

21. The method of claim **15**, wherein the passing comprises projecting the reticle from the user-viewable interface as a collimated beam.

22. The method of claim **15**, wherein the reticle is a luminous disk.

23. The method of claim **15**, wherein the reticle is a red dot.

24. The method of claim **15**, further comprising adjusting an intensity of the reticle in response to a user control.

25. The method of claim **15**, wherein the gun sight is an occluded sight, the method further comprising providing the reticle substantially co-axially aligned with a longitudinal axis of a barrel of a gun for use in aiming the gun.

26. The method of claim **15**, wherein the gun sight is a reflex sight, the method further comprising superimposing the reticle over a target field for use in aiming a gun.

27. The method of claim 15, further comprising providing a signal by a magnetometer to adjust an operation of the gun sight based on a proximity of the magnetometer to a magnet of a holster.

28. A method of operating a gun sight, the method comprising:

moving the gun sight to a first position;

viewing a guide at a peripheral area of a user-viewable interface of the gun sight while the gun sight is at the first position;

moving the gun sight to a second position based on the guide; and

viewing the reticle at a substantially central area of the user-viewable interface while the gun sight is at the second position, wherein the reticle is not viewable by the user while the gun sight is at the first position.

29. The method of claim 28, wherein:

the guide is visible to the user and the reticle is also visible to the user while the gun sight is at the second position; and

the guide remains continuously visible to the user as the user moves the gun sight from the first position to the second position.

30. The method of claim 28, wherein the gun sight comprises:

a light source adapted to project light; and

an optical element comprising:

a substantially central external surface adapted to pass the light to provide the reticle, and

a substantially peripheral external surface adapted to refract the light to provide the guide to aid a user to reposition the gun sight to view the reticle.

31. The method of claim 30, wherein the substantially peripheral external surface is one of a plurality of substantially peripheral external surfaces adapted to refract the light to provide guides at a plurality of peripheral areas of the user-viewable interface to aid the user to reposition the gun sight to view the reticle.

32. The method of claim 31, wherein the peripheral areas comprise at least two sides of the user-viewable interface.

33. The method of claim 30, wherein the substantially peripheral external surface comprises a plurality of non-uniformities adapted to refract the light as desired.

34. The method of claim 33, wherein the non-uniformities comprise machined portions of the substantially peripheral external surface.

35. The method of claim 30, wherein the optical element is adapted to project the reticle from the user-viewable interface as a collimated beam.

36. The method of claim 28, wherein the reticle is a luminous disk.

37. The method of claim 28, wherein the reticle is a red dot.

38. The method of claim 28, further comprising operating a user control of the gun sight to adjust an intensity of the reticle.

39. The method of claim 28, wherein the gun sight is an occluded sight adapted to provide the reticle substantially co-axially aligned with a longitudinal axis of a barrel of a gun for use in aiming the gun.

40. The method of claim 28, wherein the gun sight is a reflex sight adapted to superimpose the reticle over a target field for use in aiming a gun.

41. The method of claim 28, wherein:

the gun sight is attached to a gun;

the method comprises removing the gun from a holster to adjust an operation of the gun sight; and

the gun sight comprises a magnetometer adapted to provide a signal to adjust the operation of the gun sight based on a proximity of the magnetometer to a magnet of the holster.

* * * * *